Leonard S. Fiore, Inc.
GENERAL CONTRACTOR
DEDICATED TO EXCELLENCE
5506 SIXTH AVENUE REAR ALTOONA, PA 16602 PH: (814) 946-3686
www.lsfiore.com Main FX: (814) 946-5288 Proj Mgmt FX: (814) 946-3526

TRANSMITTAL
NO: 252

Please reference the Proj Name, Proj #, and applicable Submittal #'s, RFI#'s, etc. on all correspondence to Leonard S. Fiore, Inc.

PROJECT: Garrett College CEPAC

DATE: 3/16/2021

PROJ #: GC-0422

REF: Submittal

TO: Kathy Walbert
DLR Group
7290 West 133rd Street
Overland Park, KS 66213-4748
Ph: 913-685-5684

WE ARE SENDING:
- ☐ Shop drawings
- ☐ Plans
- ☐ Letter
- ☐ Samples
- ☐ Prints
- ☐ Specifications
- ☐ Change Order
- ☑ Other: Submittal

SUBMITTED FOR:
- ☑ Approval
- ☐ Your use
- ☐ As Requested
- ☐ Review and Comment

SENT VIA:
- ☑ Attached
- ☑ Separate cover via:

ACTION TAKEN:
- ☐ Approved as Submitted
- ☐ Approved as Noted
- ☐ Returned for Corrections
- ☐ "Due Date:
- ☐ Revise & Resubmit

Item	Copies	Date	No.	Description	Status
Submittal	1	3/16/21	054000-001-01 Rev 1	COLD-FORMED METAL FRAMING (Exterior)	New
Attachment	1			Re: Submittal 054000-001-01 Rev 1 - Submittal 1's SPC Documents.pvsync	

Notes:

CC:

Signed: Nancy Nyman
Nancy Nyman (Leonard S. Fiore, Inc.)

Leonard S. Fiore, Inc.
GENERAL CONTRACTOR
DEDICATED TO EXCELLENCE
5506 SIXTH AVENUE REAR ALTOONA, PA 16602 PH: (814) 946-3686
www.lsfiore.com Main FX: (814) 946-5288 Proj Mgmt FX: (814) 946-3526

SUBMITTAL COVER SHEET

PROJECT NAME: Garrett College CEPAC

LSF PROJECT #: GC-0422

CONSTRUCTION PROFESSIONAL: Leonard S. Fiore, Inc

DATE: 3/16/2021

SPEC SECT:	LSF SUBMITTAL#:	REVISION#:	DESCRIPTION:	SUPPLIER:
054000	001-01	1	COLD-FORMED METAL FRAMING (Exterior)	EXCEL ENGINEERING

PAGE: 054000

PARA: 1.4

Remarks:

LSF to verify all Field Dimensions prior to fabrication
LSF to coordinate this work (CFMF) with all other trades

CARROLL ENGINEERING, INC. 215 Schilling Circle Suite 102, Hunt Valley, MD 21031

APPROVED ( ) APPROVED AS NOTED (X)
REJECTED ( ) REVISE & RESUBMIT ( )
NOT REVIEWED (SUBMITTAL NOT REQUIRED) ( )

This review is only for general conformance with the design concept with the project and general compliance with the information given in the Contract Documents. Approval of, or corrections or comments made on, the shop drawings during this review do not relieve the contractor from compliance with the requirements of the plans and specifications. Approval of a specific item shall not include approval of an assembly of which the item is a component. Contractor is responsible for: dimensions to be confirmed and correlated at the jobsite; information that pertains solely to the fabrication processes or to the means, methods, techniques, sequences and procedures of construction; coordination of the Work of all trades; and for performing all work in a safe and satisfactory manner. For any submittal of these documents after the initial submittal, the Contractor is responsible for highlighting, clouding or noting any changes to the plans or data made after that initial submittal.

DATE: 03/24/21 BY: IP

See comments throughout submittal.

Contractor's Stamp:

Leonard S. Fiore, Inc.
GENERAL CONTRACTOR
DEDICATED TO EXCELLENCE

Reviewed ☐
Approved ☒
Approved as Noted ☐
Revise and Resubmit ☐
Rejected ☐

By: TG Date: 3-16-2021
Subm. # 054000-001-01

Reviewed for general performance subject to design and compliance with contract documents.

Approved By:

Tracy Gardner

Phone: 814-946-3686
Fax: 814-946-5288

Please reference the Proj Name, Proj #, and applicable Submittal #'s, RFI#'s, etc. on all correspondence to Leonard S. Fiore, Inc.

DLR Group

__ REVIEWED
__ REVIEWED – ADDITIONAL INFORMATION REQUIRED
_X_ FURNISH AS CORRECTED
Review does not authorize changes to contract sum unless stated in separate letter or change order.

__ REVISE AND RESUBMIT
__ REJECTED
__ NOT REVIEWED

This review is only for general conformance with the design concept and the information given in the Construction Documents. Corrections or comments made on the shop drawings during this review do not relieve the contractor from compliance with the requirements of the plans and specifications. Review of a specific item shall not include review of an assembly of which the item is a component. The contractor is responsible for dimensions to be confirmed and correlated at the jobsite; information that pertains solely to the fabrication processes or to the means, methods, techniques, sequences and procedures of construction; coordination of the work with that of all other trades; and performing all work in a safe and satisfactory manner.

DLR Group

Date: 04.08.2021
By: Rachel Mihaly

FIORE TO COORDINATE STRUTS WITH CFMF IF SUPPLIED BY NON STRUCTURAL FRAMING CONTRACTOR.

FIORE IS RESPONSIBLE FOR ALL BLOCKING AND SHEATHING AS REQUIRED PER THE CONTRACT DOCUMENTS. THESE SHOP DRAWINGS DO NOT SHOW BLOCKING OR SHEATHING AROUND THE CURTAINWALL OPENINGS.

THIS IS FURNISH AS CORRECTED. THE SHEETS NEED TO BE FIXED AND FIORE NEEDS TO SUBMIT A FINAL RECORD COPY OF THIS SUBMITTAL TO THE DESIGN TEAM. SEE ADDITIONAL PDF AT END THAT HAVE DETAILS THAT WERE NOT PROVIDED IN THIS SUBMITTAL. PROVIDE ADDITIONAL REQUESTED DETAILS IN RECORD COPY.

FIORE AND THEIR SPECIALTY ENGINEER ARE TO COORDINATE THIS SUBMITTAL WITH THE REVIEW OF THE COLD-FORMED STEEL FRAMING SHOP DRAWINGS AND MODIFY IF NECESSARY ALL CALCULATIONS PER COMMENTS IN THAT SUBMITTAL.

FIORE IS TO VERIFY ALL DIMENSIONS IN THE FIELD PRIOR TO FABRICATION.

FIORE IS TO COORDINATE THIS WORK WITH ALL OTHER TRADES THAT ARE IMPACTED TO ENSURE PROPER FIT OF FINISHED PRODUCTS AND MATERIALS.

DLR GROUP HAS NOT REVIEWED THE MEMBER SIZES OR CONNECTION CAPACITIES SHOWN IN THIS SUBMITTAL

THE DESIGN OF THE MEMBERS AND CONNECTIONS IS THE RESPONSIBILITY OF THE PROFESSIONAL ENGINEER WHO HAS SEALED THIS SUBMITTAL

March 9, 2021

Tracy Gardner
Leonard S. Fiore, Inc.
1301 N. Atherton Street
State College, PA 16803
Phone: 814-280-5156
E-mail: tgardner@lsfiore.com

RE: U.S. Green Building Council LEED® v4 Credits for Garrett College CEPAC 687 Mosser Road Mchenry, MD 21541

This letter serves as ClarkDietrich Building Systems' declaration of data for LEED credits for the above referenced project. The following provides information on how ClarkDietrich products contribute to the LEED v4 credits.

Credit Summary

Materials and Resources Credit

- Building Product Disclosure and Optimization – Environmental Product Declarations
  - Option 1. Environmental Product Declaration (EPD) (1 Point)
  - Option 1. Exemplary Performance (1 Point)
- Building Product Disclosure and Optimization – Sourcing of Raw Materials
  - Option 2. Leadership Extraction Practices (1 Point)
  - Option 2. Location Valuation Factor (200%)
  - Option 2. Exemplary Performance (1 Point)
- Building Product Disclosure and Optimization – Material Ingredients
  - Option 1. Material Ingredient Reporting (1 Point)
  - Option 1. Exemplary Performance (1 Point)
- Construction and Demolition Waste Management
  - Option 1. Diversion (1-2 Points)
  - Option 2. Reduction of Total Waste Material (2 Points)
  - Exemplary Performance (1 Point) – Achieve Option 1 and 2

When submitting this letter per LEED® requirements, it is your responsibility to verify that substitutions are not made and that ClarkDietrich Building Systems' products are supplied for this project.

Heather Griffin

Engineering Technical Support – Western, US
ClarkDietrich Building Systems, LLC
ClarkDietrich Engineering Systems, LLC
Toll Free: 888 437 3244
www.ClarkDietrich.com

See below for detailed explanations of the v4 credits and points:

Materials and Resources Credit

Building Product Disclosure and Optimization – Environmental Product Declarations

Option 1. Environmental Product Declaration (EPD) (1 Point)

Use at least 20 different permanently installed products sourced from at least five different manufacturers that meet the disclosure criteria below.

1) Environmental Product Declarations which conform to ISO 14025, 14040, 14044, and EN 15804 or ISO 21930 and have at least a cradle to gate scope.
   a) Product-specific Type III EPD (value = 1.0 product) – *Download from our website*

Option 1. Exemplary Performance (1 Point)

Source at least 40 qualifying products from five manufacturers.

1) Defining a permanently installed product:
   a) Products that arrive at the project site ready for installation such as metal studs, wallboard, and concrete masonry units are all considered separate products.
   b) LEED defines carpets of different pile heights as separate products because they are used for different kinds of foot traffic.
2) Therefore, because they are used for different wall heights, thicknesses and applications the following non-exhaustive example list of ClarkDietrich products can be considered as separate products and count towards the standard 20 for Option 1 or the 40 qualifying products to gain the Exemplary Performance Point.
   a) 1-5/8" ProSTUD, 2-1/2" ProSTUD, 3-1/2" ProSTUD, 3-5/8" ProSTUD, 4" ProSTUD, 5-1/2" ProSTUD, 6" ProSTUD, Metal Corner Beads, Head of Wall Deflection Systems, Metal Lath, Shaftwall Framing, 2-1/2" Structural Studs, 3-1/2" Structural Studs, 3-5/8" Structural Studs, 4" Structural Studs, 5-1/2" Structural Studs, 6" Structural Studs, 8" Structural Studs, 10" Structural Studs, 12" Structural Studs, 14" Structural Studs, etc., etc.

Materials and Resources Credit

Building Product Disclosure and Optimization – Sourcing of Raw Materials

Option 2. Leadership Extraction Practices (1 Point)

Use products that meet the responsible extraction criteria below for at least 25%, by cost, of the total value of permanently installed building products in the project.

- **Recycled content.** Recycled content is the sum of postconsumer recycled content plus one-half the preconsumer recycled content, based on cost. Products meeting recycled content criteria are valued at 100% of their cost for the purposes of credit achievement calculation.
- Based on 2015 purchasing data ClarkDietrich cold-formed metal framing products and accessories that are manufactured in Baltimore, MD contain an average of **31.8% post-consumer** recycled content and **5.5% pre-consumer** recycled content per pound of steel.

Applies to Option 2. Location Valuation Factor (200%)

For credit achievement calculation, products sourced (extracted, manufactured, and purchased) within 100 miles (160 km) of the project site are valued at 200% of their base contributing cost.

- Upon request the steel coils (including recycled content) can be manufactured in Braddock, PA and a majority of the final products (steel framing) can be manufactured in Baltimore, MD which is 64 and 147 miles respectively from your jobsite. This regional materials request may cause extended lead times and increased pricing. Note: The raw material, iron ore, is not included here because it is almost impossible to track, and there are very few active mines in the United States (Michigan, Minnesota) within 100 miles of any major metropolitan area.

Option 2. Exemplary Performance (1 Point)

Purchase 50%, by cost, of the total value of permanently installed building products that meet the responsible extraction criteria.35

Materials and Resources Credit

Building Product Disclosure and Optimization – Material Ingredients

Option 1. Material Ingredient Reporting (1 Point)

Use at least 20 different permanently installed products from at least five different manufacturers that use the following program to demonstrate the chemical inventory of the product to at least 0.1% (1000 ppm).

- **Health Product Declaration.** The end use product has a published, complete Health Product Declaration with full disclosure of known hazards in compliance with the Health Product Declaration open Standard. – *Download from our website*
- **NOTE:** Mill certified steel must be specified when placing your order to receive this credit.

Option 1. Exemplary Performance (1 Point)

Purchase at least 40 permanently installed building products that meet the credit criteria.

- Defining a permanently installed product:
  - Products that arrive at the project site ready for installation such as metal studs, wallboard, and concrete masonry units are all considered separate products.
  - LEED defines carpets of different pile heights as separate products because they are used for different kinds of foot traffic.
- Therefore, because they are used for different wall heights, thicknesses and applications the following non-exhaustive example list of ClarkDietrich products can be considered as separate products and count towards the standard 20 for Option 1 or the 40 qualifying products to gain the Exemplary Performance Point.
  - 1-5/8" ProSTUD, 2-1/2" ProSTUD, 3-1/2" ProSTUD, 3-5/8" ProSTUD, 4" ProSTUD, 5-1/2" ProSTUD, 6" ProSTUD, Metal Corner Beads, Head of Wall Deflection Systems, Metal Lath, Shaftwall Framing, 2-1/2" Structural Studs, 3-1/2" Structural Studs, 3-5/8" Structural Studs, 4" Structural Studs, 5-1/2" Structural Studs, 6" Structural Studs, 8" Structural Studs, 10" Structural Studs, 12" Structural Studs, 14" Structural Studs, etc., etc.

Materials and Resources Credit

Construction and Demolition Waste Management

Requirements:

Recycle and/or salvage nonhazardous construction and demolition materials. Calculations can be by weight or volume but must be consistent throughout. *ClarkDietrich steel is 100% recyclable.*

Option 1. Diversion (1-2 Points)

Option 1. Path 1. Divert 50% and Three Material Streams (1 point)

Divert at least 50% of the total construction and demolition material; diverted materials must include at least three material streams.

Option 1. Path 2. Divert 75% and Four Material Streams (2 points)

Divert at least 75% of the total construction and demolition material; diverted materials must include at least four material streams.

Option 2. Reduction of Total Waste Material (2 Points)

Do not generate more than 2.5 pounds of construction waste per square foot (12.2 kilograms of waste per square meter) of the building's floor area. *ClarkDietrich products can be cut to length reducing the amount of waste created by cold-formed steel framing which will contribute to achieving this option.*

Exemplary Performance (1 Point)

Achieve both Option 1 (either Path 1 or Path 2) and Option 2.

ClarkDietrich™
BUILDING SYSTEMS

NSF™

Certified Environmental Product Declaration
www.nsf.org

ENVIRONMENTAL PRODUCT DECLARATION CLARKDIETRICH COLD-FORMED STEEL PRODUCTS

ClarkDietrich Building Systems
9100 Centre Pointe Dr., Ste. 210
West Chester, OH 45069
p. 513-870-1100
www.clarkdietrich.com

STRONGER THAN STEEL℠

Certification is specific to ClarkDietrich Building Systems due to the declared system boundary of data collection. It is not applicable to the same or similar products produced by other manufacturers.

ENVIRONMENTAL PRODUCT DECLARATION VERIFICATION

EPD INFORMATION			
Program Operator		NSF International	
Declaration Holder		ClarkDietrich Building Systems	
Product Cold-Formed Steel Products	Approved June 30, 2015	Valid Until February 26, 2021	Declaration # EPD10056
Independent verification of the declaration and data, according to ISO 14025:2006 and ISO 21930:2007.			
☐ Internal	☒ External	Lori Bestervelt Bestervelt@nsf.org	
This life cycle assessment was independently verified by in accordance with ISO 14044 and the reference PCR:		Jack Geibig jgeibig@ecoform.com	

LCA INFORMATION	
Basis LCA	ProSTUD® Drywall Framing System & Cold-Formed Steel Products, May 15, 2015
LCA Preparer	thinkstep Takuma Ono takuma.ono@thinkstep.com
This life cycle assessment was critically reviewed in accordance with ISO 14044 by:	Jack Geibig EcoForm jgeibig@ecoform.com

PCR INFORMATION	
Program Operator	SCS Global Services
Reference PCR	North American Product Category Rule for Designated Steel Construction Products
Date of Issue	May 5, 2015
PCR review was conducted by:	Dr. Thomas Gloria, Ph. D. (Chair) Industrial Ecology Consultants t.gloria@industrial-ecology.com

ABOUT US

ClarkDietrich Building Systems offers a comprehensive lineup of steel construction products and services across the United States and abroad. Using cold-formed steel, we manufacture innovative products for interior framing, interior finishing, exterior framing and floor framing, as well as clips, connectors, metal lath and accessories.

Within our facilities we actively recycle 100% of steel waste from all aspects of our processing, beginning with the slitting of the master coil and continuing through to the final roll-forming of our product. Every day at every plant. Steel is fully recyclable and we have always been diligent in this effort.

Product development is focused on labor savings systems, which incorporates optimal utilization of all raw materials. From concept to launch, our product offering consciously engages optimal use of material as well as ease of construction.

Formed in 2011 through the combination of two established market leaders—ClarkWestern Building Systems and Dietrich Metal Framing—ClarkDietrich is in an unprecedented position to help you bring change to the built environment.

ClarkDietrich Building Systems
9100 Centre Pointe Dr., Ste. 210
West Chester, OH 45069
p. 513-870-1100
www.clarkdietrich.com

Manufacturing Sites:

Baltimore, MD	Dallas, TX	Rochelle, IL
Baytown, TX	Kapolei, HI	Sacramento, CA
Bristol, CT	McDonough, GA	Warren, OH East
Dade City, FL	Riverside, CA	Warren, OH West

PRODUCT

Product Description and Application

Cold-formed steel framing products have bare steel thicknesses in the range of 0.0120 inches to 0.1180 inches. These products include interior framing, interior finishing trims and accessories, exterior framing, floor framing, clips/connectors, expanded metal lath, plaster trim and accessories.

Using cold-formed steel, innovative products are manufactured for use as interior framing, interior finishing, exterior framing, floor framing, as well as clips, connectors, metal lath and accessories. These products are most commonly used in compliance with the International Building Code and the International Residential Code.

Common applications of cold-formed steel framing products are as follows:

- Interior Framing – Nonstructural
- Interior Finishing – Nonstructural
- Exterior Framing – Structural Load-Bearing
- Floor Framing – Structural Load-Bearing
- Roof Framing – Structural Load-Bearing
- Exterior Finishing

Technical Data

The following table lists metal thicknesses and strengths for all ProSTUD®, structural products and clips/connectors:

Product	Gauge	Mils	Bare Steel Thickness (inches)	Design Thickness (inches)	Yield Strength (ksi)
Accessories	26 min	12 min	0.012 min	0.01224 min	N/A
DW	25 to 20	15 to 33	0.0150 to 0.0329	0.0158 to 0.0346	33 to 65
STRUC	20 to 12	33 to 97	0.0329 to 0.0966	0.0346 to 0.1017	33 to 50
HDS	20 to 12	33 to 97	0.0329 to 0.0966	0.0346 to 0.1017	33 to 50
TradeReady	18 to 12	43 to 97	0.0428 to 0.0966	0.0451 to 0.1017	33 to 50
Clips/Connectors	20 to 10	33 to 118	0.0329 to 0.1180	0.0346 to 0.1242	33 to 50
Product		**Weight per Sq. Yd.**		**Sheet Size**	**Galvanization**
Metal Lath		2.5 or 3.4 lbs.		27" by 97"	G-60

NOTE: For more detailed product line information go to http://www.clarkdietrich.com/products.

Constructional Data

Placing on the market / Application rules

Most commonly used and referred to codes in the steel framing industry. List is not intended to be all-inclusive or comprehensive.

Manufacturing Codes

- ASTM C645, Specification for Nonstructural Steel Framing Members
  - Interior Framing – Nonstructural
- ASTM C955, Specification for Load-Bearing (Transverse and Axial) Steel Studs, Runners (Tracks), and Bracing or Bridging for Screw Application of Gypsum Board and Metal Plaster Bases
  - Exterior Framing – Structural Load-Bearing
  - Floor Framing – Structural Load-Bearing
  - Roof Framing – Structural Load-Bearing
- ASTM C1047, Specification for Accessories for Gypsum Wallboard and Gypsum Veneer Base
  - Interior Finishing – Nonstructural
- ASTM C847, Specification for Metal Lath
  - Metal Lath

Construction and Building Codes

- International Building Code (IBC)
  - Chapter 22, Section 2210, Cold-Formed Steel
  - Chapter 25, Section 2505, Shear Wall Construction
  - Chapter 25, Section 2506, Gypsum Board and Gypsum Panel Product Materials
  - Chapter 25, Section 2507, Lathing and Plastering
- International Residential Code (IRC)
  - Section R505: Cold-Formed Steel Floor Framing
  - Section R603: Cold-Formed Steel Wall Framing
  - Section R804: Cold-Formed Steel Roof Framing

Structural Engineering Codes

- American Iron and Steel Institute (AISI)
  - AISI S100: North American Specification for the Design of Cold-Formed Steel Structural Members
  - AISI S200: North American Standard for Cold-Formed Steel Framing – General Provisions
  - AISI S201: North American Standard for Cold-Formed Steel Framing – Product Data
  - AISI S210: North American Standard for Cold-Formed Steel Framing – Floor and Roof System Design
  - AISI S211: North American Standard for Cold-Formed Steel Framing – Wall Stud Design
  - AISI S212: North American Standard for Cold-Formed Steel Framing – Header Design
  - AISI S213: North American Standard for Cold-Formed Steel Framing – Lateral Design
  - AISI S214: North American Standard for Cold-Formed Steel Framing – Truss Design
  - AISI S220: North American Standard for Cold-Formed Steel Framing – Nonstructural Members
  - AISI S230: Standard for Cold-Formed Steel Framing – Prescriptive Method for One and Two Family Dwellings
- American Society of Civil Engineers (ASCE)
  - ASCE 7: Minimum Design Loads for Buildings and other Structures

Delivery Status / Packaging

All of the various steel framed products are packaged and shipped using one of the following methods: skids, boxes, and buckets or cartons.

Structural Load-Bearing Members – Skid (See Figure 1)

- Products are generally nested together in pairs, then stacked with other sets of nested pairs and are held together using banding and wood dunnage

Nonstructural Framing Members – Skid (See Figure 2)

- Products are generally nested together in pairs, then stacked with other sets of nested pairs and are held together using banding and wood dunnage.

Metal Lath – Skids (See Figure 3)

- Product sheets are stacked on top of each other in a bundle and held together with plastic strapping. The bundles are stacked on top of each other and held together using banding and wood dunnage.

Corner Beads, Trims and Finishing Products – Boxes (See Figure 4 and 5)

- Desired quantity of products are stacked on top of each other, then secured inside of a cardboard box. Then cardboard boxes are stacked together with other boxes to form a skid of product and held together using banding and wood dunnage.

Clips and Connectors – Buckets or Cartons (See Figure 6 and Figure 7)

- Products are placed in a carton or plastic buckets then secured into the buckets with a plastic lid. The buckets or cartons are stacked together with other buckets or cartons to form a skid of product and held together using banding and wood dunnage.

Package Figures:

Figure 1: Skid of Structural Framing

Figure 2: Skid of Nonstructural Framing

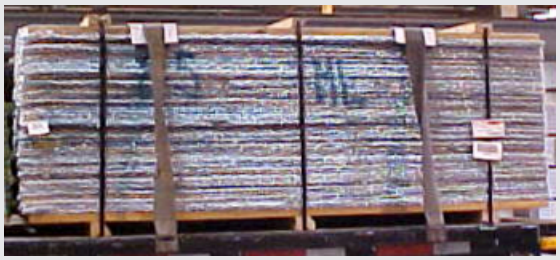

Figure 3: Skid of Metal Lath

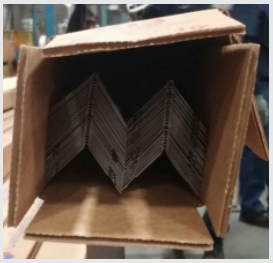

Figure 4: Box of Corner Bead

Figure 5: Skid of Corner Bead Boxes

Figure 6: Plastic Bucket of Clips

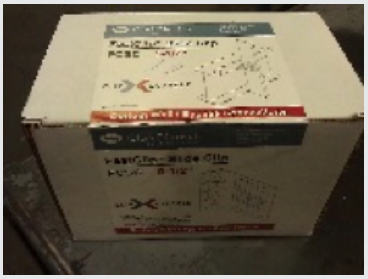

Figure 7: Carton of Clips

Base Materials / Ancillary Materials

Cold-formed steel framing products are made from coils of low alloy sheet steel with various metallic and conversion coatings for corrosion protection. Primary product components as follows:

Cold-Formed Steel Products *Based on 6" CSJ, G60, 43 mil Stud*	
Component Name	**Mass by % of total**
Base Metal	> 97.9%
Metallic Coating	< 2.1%

Manufacture

Definitions:

- Prime Steel Coil - Manufactured in North America
  - Steel coils that are purchased to meet or exceed the specifications needed to manufacture a specific product or products.
- Secondary Steel Coils
  - Steel coils that are purchased on the secondary market that may or may not match exact specifications needed but can be roll reduced and coated to meet desired specifications.
  - Steel coil production took place at either a domestic or foreign steel mill located in United States (77.5%), Canada (8.6%), Mexico (5.7%), India (3.1%), China (2.9%), or Italy (2.2%).

Process for Prime Steel

Prime Steel Coils are received into the warehouse from external suppliers. The Prime Steel Coils are slit into appropriate widths in a continuous slitting process. Then the slit coils are loaded into the roll forming machinery where continuous roll formers shape the slit coils into finished products. The finished products are packaged into skids, and the skids are loaded onto a truck where they will be shipped to the customer.

Process for Secondary Steel

Secondary Steel Coils are received into the warehouse. Where necessary secondary steel coils are cold reduced to the appropriate thickness. The Secondary Steel Coils are slit into narrow coils, then the narrow coils are loaded into the roll forming machinery where they are roll formed into finished products. The finished products are packaged into skids, and the skids are loaded onto a truck where they will be shipped to the customer.

The diagram below shows the flow of cold-formed steel products through major processes. The arrows between processes indicate transportation of intermediate products. Material input flows have associated inbound transportation.

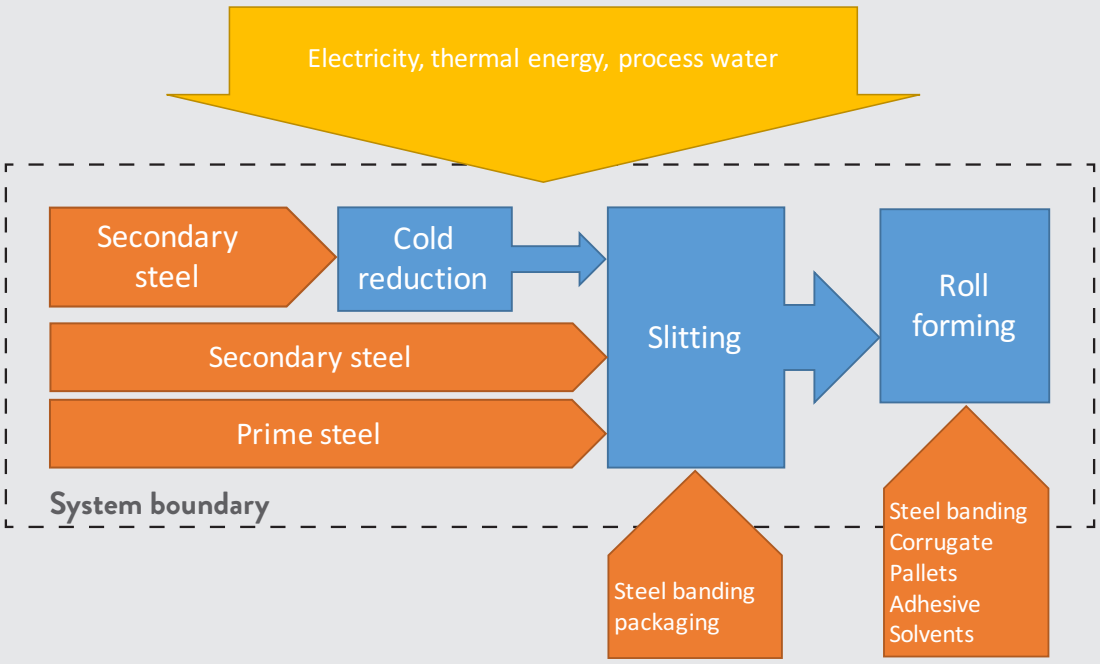

LCA CALCULATION RULES

Declared Unit
The declared unit of calculation is one metric ton of steel construction product (1000 kg).

Name	Required Unit	Value
Declared Unit	Metric Ton	1
Density	kg/m^3	7,850

System Boundary
The declared system boundary is cradle-to-gate. Cradle-to-gate includes the PCR life cycle modules A1, A2, and A3. The declared system boundaries are shown below:

Production			Installation		Use Stage							End-Of-Life				Next Product System
Raw material supply (extraction, processing, recycled material)	Transport to manufacturer	Manufacturing	Transport to building site	Installation into building	Use / application	Maintenance	Repair	Replacement	Refurbishment	Operational energy use	Operational water use	Deconstruction / demolition	Transport to EoL	Waste processing for reuse, recovery or recycling	Disposal	Reuse, recovery or recycling potential
A1	A2	A3	A4	A5	B1	B2	B3	B4	B5	B6	B7	C1	C2	C3	C4	D
X	X	X	MND	MND	MND	MND	MND	MND	MND	MND	MND	MND	MND	MND	MND	MND

Reference Service Life
Due to a cradle-to-gate declaration, a reference service life for steel products is not declared.

Scope

Temporal
All primary data were collected specific to the US. Where country / region specific secondary data were unavailable, proxy data were used but this is more an exception than the norm. Geographical representativeness is thus considered to be good.

Geographic
All primary data were collected for the year 2013. All secondary data come from the GaBi 2013 databases and are representative of the years 2009-2013. As the study intended to compare the product systems for the reference year 2013, temporal representativeness is good.

Data Quality Assessment

To ensure consistency, all primary data were collected with the same level of detail, while all background data were sourced from the GaBi databases. Allocation and other methodological choices were made consistently throughout the model.

Background Data
Most of the necessary life cycle inventories for the basic materials are available in the GaBi database. The last update of the database was 2013. Further LCIs for materials of the supply chain of the basic materials are approximated with LCIs of similar materials or estimated by the combination of available LCIs as documented in the background report. All datasets used in the major unit processes are provided in later sections of this report along with the description of the individual unit processes.

There is limited regional background data for steel that is specific to the US. There we have used the "NA: Steel hot dip galvanized" from worldsteel as the best available dataset for steel inputs. It must be noted that, the worldsteel data set does not report waste and net water consumption flows as required by the PCR. However, as the worldsteel methodology is in line with ISO 14044 allocation rules and is the best publicly available dataset for US steel, the use of this data set is justified. **Water and waste indicators shall not be reported as explained in the background report.**

Foreground Data
The foreground data collected by the manufacturer are based on yearly production amounts and extrapolations of measurements on specific machines and plants. The production data refer to an average of the year 2013.

Primary data for the production of cold-formed steel products were collected by ClarkDietrich using a specifically developed spreadsheet provided by thinkstep. Cross-checks concerning the plausibility of mass and energy flows were carried out by thinkstep on the data received via email, telephone consultation and teleconferencing.

Statement of Comparability
Any comparison of EPDs shall be subject to the requirements of ISO 21930. For comparison of EPDs which report different module scopes, such that one EPD includes Module D and the other does not, the comparison shall only be made on the basis of Modules A1, A2, and A3. Additionally, when Module D is included in the EPDs being compared, all EPDs must use the same methodology for calculation of Module D values.

Declaration of Environmental Impact Derived from LCA

Disclaimer: This Environmental Product Declaration (EPD) conforms to ISO 14025, ISO 14040, ISO 14044, and ISO 21930.

Scope of Results Reported: The PCR requires the reporting of a limited set of LCA metrics; therefore, there may be relevant environmental impacts beyond those disclosed by this EPD. The EPD does not indicate that any environmental or social performance benchmarks are met nor thresholds exceeded.

Accuracy of Results: This EPD has been developed in accordance with the PCR applicable for the identified product following the principles, requirements and guidelines of the ISO 14040, ISO 14044, ISO 14025 and ISO 21930 standards. The results in this EPD are estimations of potential impacts. The accuracy of results in different EPDs may vary as a result of value choices, background data assumptions and quality of data collected.

Comparability: EPDs are not comparative assertions and are either not comparable or have limited comparability when they cover different life cycle stages, are based on different product category rules or are missing relevant environmental impacts. Such comparisons can be inaccurate, and could lead to the erroneous selection of materials or products which are higher - impact, at least in some impact categories. Any comparison of EPDs shall be subject to the requirements of ISO 21930. For comparison of EPDs which report different module scopes, such that one EPD includes Module D and the other does not, the comparison shall only be made on the basis of Modules A1, A2, and A3. Additionally, when Module D is included in the EPDs being compared, all EPDs must use the same methodology for calculation of Module D values.

Parameters Describing Environmental Impacts

In accordance to the guiding PCR, the characterization method will be based on TRACI March 2012 v2.1 and CML 2012 v4.1.

Environmental impact: 1 metric ton of Cold-Formed Steel product

Parameter	Unit	LCIA Method	A1 – A3
GWP	[metric ton CO_2-eq.]	TRACI (version 2.1)	2.39
ODP	[metric ton CFC11-eq.]	TRACI (version 2.1)	5.07E-08
AP	[metric ton SO_2-eq.]	TRACI (version 2.1)	0.0134
EP	[metric ton N eq.]	TRACI (version 2.1)	5.55E-04
POCP	[metric ton O_3 eq.]	TRACI (version 2.1)	0.185
ADPE*	[metric ton Sb eq.]	CML Baseline Method, Version 4.1 (October 2012)	4.58E-5
ADPF	[MJ]	CML Baseline Method, Version 4.1 (October 2012)	2.78E04

Caption	GWP = Global warming potential excluding biogenic carbon ; ODP = Depletion potential of the stratospheric ozone layer; AP = Acidification potential of land and water; EP = Eutrophication potential; POCP = Formation potential of tropospheric ozone photochemical oxidants; ADPE = Abiotic depletion potential for non-fossil resources; ADPF = Abiotic depletion potential for fossil resources

*This indicator is based on assumptions regarding current reserves estimates. Users should use caution when interpreting results because there is insufficient information on which indicator is best for assessing the depletion of abiotic resources.

Parameters Describing Resource Use

Resource use: 1 metric ton of Cold-Formed Steel product

Parameter	Unit	A1 – A3
PERE	[MJ]	1800
PERM	[MJ]	0
PERT	[MJ]	1800
PENRE	[MJ]	2950
PENRM	[MJ]	0
PENRT	[MJ]	2950
SM	[metric ton]	0.447
RSF	[MJ]	0
NRSF	[MJ]	0
FW	[M^3]	Not reported

Caption	PERE = Use of renewable primary energy as raw materials; PERM = Use of renewable primary energy as raw materials; PERT = Total use of renewable primary energy resources; PENRE = Use of non-renewable primary energy as raw materials; PENRM = Use of non-renewable primary energy d as raw materials; PENRT = Total use of non-renewable primary energy resources; SM = Use of secondary material; RSF = Use of renewable secondary fuels; NRSF = Use of non-renewable secondary fuels; FW = Use of net fresh water

Parameters Describing Waste Categories and Output Flows

Output flows and waste categories: 1 metric ton of Cold-Formed Steel product

Parameter	Unit	A1- A3
HWD	[metric ton]	Not reported
NHWD	[metric ton]	Not reported
RWD	[metric ton]	Not reported
CRU	[metric ton]	0
MFR	[metric ton]	0.056
MER	[metric ton]	0
EEE	[MJ]	0
EET	[MJ]	0

Caption	HWD = Hazardous waste disposed; NHWD = Non-hazardous waste disposed; RWD = Radioactive waste disposed; CRU = Components for re-use; MFR = Materials for recycling; MER = Materials for energy recovery; EEE = Exported electrical energy; EET = Exported thermal energy

FW, HWD, NHWD and RWD flows have not been reported as the worldsteel dataset used does report on waste and net water consumption flows in sufficient detail. The dataset is otherwise representative of the technology and conforms to ISO 14044.

Interpretation – Cold-Formed Steel

Module A1 dominates across all impact categories, contributing to over 90% of impacts except for primary energy from renewable resources (PERT), where the contribution is lower at about 65%. Apart from PERT, contributions from A3 range from about 0 – 2% across the impact categories/indicators.

As a whole, module A2 also contributes very little. It impacts across the categories with a maximum of about 2.7% in the case of Eutrophication potential (EP).

ClarkDietrich
BUILDING SYSTEMS

NSF

Certified Environmental Product Declaration
www.nsf.org

ENVIRONMENTAL PRODUCT DECLARATION PROSTUD® WITH DIAMONDPLUS™ COATING

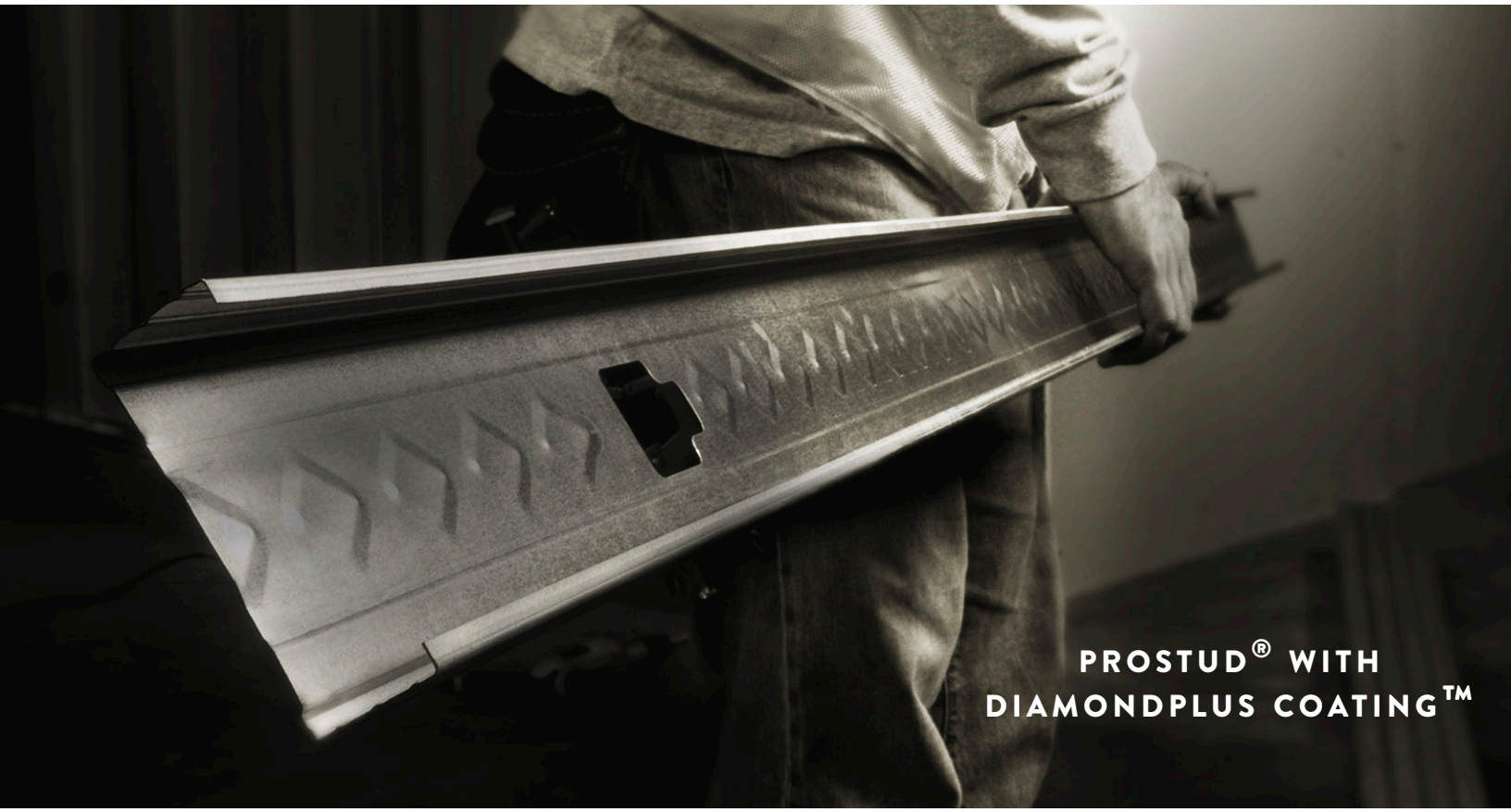

ClarkDietrich Building Systems
9100 Centre Pointe Dr., Ste. 210
West Chester, OH 45069
p. 513-870-1100
www.clarkdietrich.com

STRONGER THAN STEEL℠

Certification is specific to ClarkDietrich Building Systems due to the declared system boundary of data collection. It is not applicable to the same or similar products produced by other manufacturers.

ENVIRONMENTAL PRODUCT DECLARATION VERIFICATION

EPD INFORMATION			
Program Operator		NSF International	
Declaration Holder		ClarkDietrich Building Systems	
Product ProSTUD® with DiamondPlus™ Coating	Approved June 30, 2015	Valid Until February 26, 2021	Declaration # EPD10057
Independent verification of the declaration and data, according to ISO 14025:2006 and ISO 21930:2007.			
☐ Internal	☒ External	Lori Bestervelt Bestervelt@nsf.org	
This life cycle assessment was independently verified by in accordance with ISO 14044 and the reference PCR:		Jack Geibig jgeibig@ecoform.com	

LCA INFORMATION	
Basis LCA	ProSTUD® Drywall Framing System & Cold-Formed Steel Products, May 15, 2015
LCA Preparer	thinkstep Takuma Ono takuma.ono@thinkstep.com
This life cycle assessment was critically reviewed in accordance with ISO 14044 by:	Jack Geibig EcoForm jgeibig@ecoform.com

PCR INFORMATION	
Program Operator	SCS Global Services
Reference PCR	North American Product Category Rule for Designated Steel Construction Products
Date of Issue	May 5, 2015
PCR review was conducted by:	Dr. Thomas Gloria, Ph. D. (Chair) Industrial Ecology Consultants t.gloria@industrial-ecology.com

ABOUT US

ClarkDietrich Building Systems offers a comprehensive lineup of steel construction products and services across the United States and abroad. Using cold-formed steel, we manufacture innovative products for interior framing, interior finishing, exterior framing and floor framing, as well as clips, connectors, metal lath and accessories.

Within our facilities we actively recycle 100% of steel waste from all aspects of our processing, beginning with the slitting of the master coil and continuing through to the final roll-forming of our product. Every day at every plant. Steel is fully recyclable and we have always been diligent in this effort.

Product development is focused on labor savings systems, which incorporates optimal utilization of all raw materials. From concept to launch, our product offering consciously engages optimal use of material as well as ease of construction.

Formed in 2011 through the combination of two established market leaders—ClarkWestern Building Systems and Dietrich Metal Framing—ClarkDietrich is in an unprecedented position to help you bring change to the built environment.

ClarkDietrich Building Systems
9100 Centre Pointe Dr., Ste. 210
West Chester, OH 45069
p. 513-870-1100
www.clarkdietrich.com

Manufacturing Sites:

Baltimore, MD	Dallas, TX	Rochelle, IL
Baytown, TX	Kapolei, HI	Sacramento, CA
Bristol, CT	McDonough, GA	Warren, OH East
Dade City, FL	Riverside, CA	Warren, OH West

PRODUCT

Product Description and Application

This declaration covers ProSTUD® Drywall Framing with DiamondPlus™ Coating. ClarkDietrich offers ProSTUD with DiamondPlus coating—the next generation of high-performance, code-compliant steel framing systems. The corrosion resistance of DiamondPlus Coating is superior to that of G40 Hot Dipped Galvanized. DiamondPlus Coating isn't a paint, barrier or mere surface treatment. It attaches to the base substrate of the steel through a chemical reaction. The result? A permanently bonded coating that provides unparalleled corrosion protection. ProSTUD with DiamondPlus coating doesn't just meet code, it surpasses it. DiamondPlus coated steel products have bare steel thicknesses in the range of 0.0150 inches to 0.0329 inches.

Common interior framing applications of the ProSTUD Drywall Framing system with DiamondPlus Coating:

- Fire Rated Partitions - Nonstructural
- Non Fire Rated Partitions - Nonstructural
- Ceilings
- Soffits
- Bulkheads

Technical Data

The following table lists metal thicknesses and strengths for ProSTUD Drywall Framing system with DiamondPlus Coating products.

Product	Gauge	Mils	Bare Steel Thickness (inches)	Design Thickness (inches)	Yield Strength (ksi)
ProSTUD	25 to 20	15 to 33	0.0150 to 0.0329	0.0158 to 0.0346	33 to 65
ProTRAK	25 to 20	15 to 33	0.0150 to 0.0329	0.0158 to 0.0346	33 to 50

NOTE: For more detailed product line information go to http://www.clarkdietrich.com/products

Constructional Data

Placing on the market / Application rules

Most commonly used and referred to codes in the steel framing industry. List is not intended to be all-inclusive or comprehensive.

Manufacturing Codes

- ASTM C645, Specification for Nonstructural Steel Framing Members
  - Interior Framing – Nonstructural

Construction and Building Codes

- International Building Code (IBC)
  - Chapter 25, Section 2506, Gypsum Board and Gypsum Panel Product Materials
- International Residential Code (IRC)
  - Section R603: Cold-Formed Steel Wall Framing

American Iron and Steel Institute (AISI) Standards

- AISI S220: North American Standard for Cold-Formed Steel Framing – Nonstructural Members

Delivery status / Packaging

ProSTUD Drywall Framing with DiamondPlus Coating is packaged and shipped in skids. Products are generally nested together in pairs, then stacked with other sets of nested pairs and are held together using banding and wood dunnage (See Figure 1).

Figure 1: Skid of Nonstructural Framing

Base Materials / Ancillary Materials

DiamondPlus Coating treatment bonds chemically to the steel substrate, forming a superior anti-corrosion protection compared to an industry standard G40 grade steel. Primary product components as follows:

ProSTUD with DiamondPlus Coating *Based on 3.625" ProSTUD 20*	
Component Name	**Mass by % of total**
Base Metal	> 98.0 %
Metallic Coating	< 1.9 %
DiamondPlus Coating	< 0.1 %

Manufacture

Definitions:

- Secondary Steel Coils
  - Steel coils that are purchased on the secondary market that may or may not match exact specifications needed but can be roll reduced and coated to meet desired specifications.
  - Steel coil production took place at either a domestic or foreign steel mill located in United States (77.5%), Canada (8.6%), Mexico (5.7%), India (3.1%), China (2.9%), or Italy (2.2%).

Process for Secondary Steel

Secondary Steel Coils are received into the warehouse. Where necessary secondary steel coils are cold reduced to the appropriate thickness. When the Secondary Steel Coils are cold reduced, then they have an additional anti-corrosion coating added called DiamondPlus. The Secondary Steel Coils are slit into narrow coils, then the narrow coils are loaded into the roll forming machinery where they are roll formed into finished products. The finished products are packaged into skids, and the skids are loaded onto a truck where they will be shipped to the customer.

The diagram below shows the flow of ProSTUD with DiamondPlus Coating products through major processes. The arrows between processes indicate transportation of intermediate products. Material input flow has associated inbound transportation.

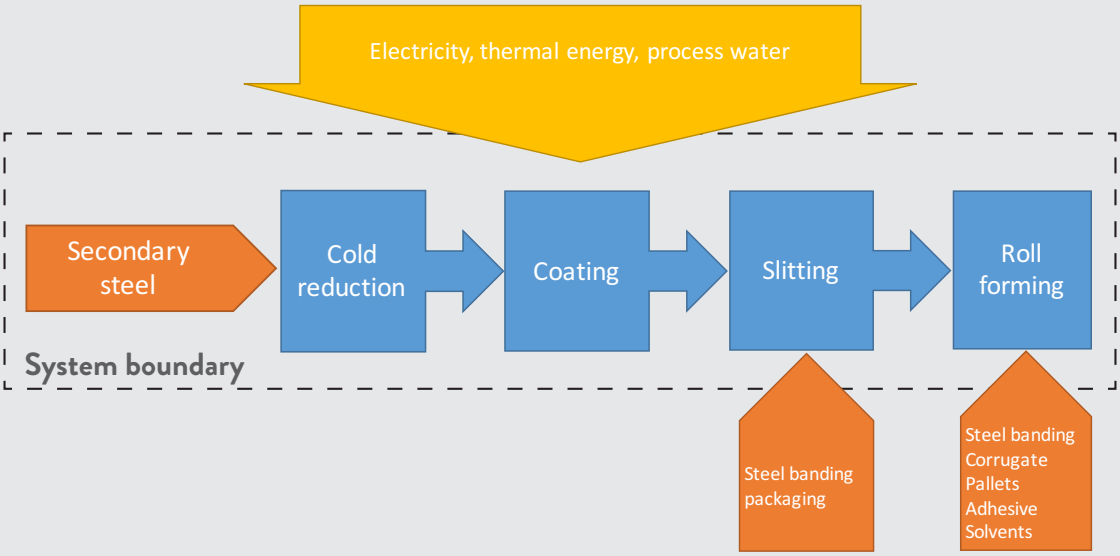

LCA CALCULATION RULES

Declared Unit
The declared unit of calculation is one metric ton of steel construction product (1000 kg).

Name	Required Unit	Value
Declared Unit	Metric Ton	1
Density	kg/m^3	7,850

System Boundary
The declared system boundary is cradle-to-gate. Cradle-to-gate includes the PCR life cycle modules A1, A2, and A3. The declared system boundaries are shown below:

Production			Installation		Use Stage							End-Of-Life				Next Product System
Raw material supply (extraction, processing, recycled material)	Transport to manufacturer	Manufacturing	Transport to building site	Installation into building	Use / application	Maintenance	Repair	Replacement	Refurbishment	Operational energy use	Operational water use	Deconstruction / demolition	Transport to EoL	Waste processing for reuse, recovery or recycling	Disposal	Reuse, recovery or recycling potential
A1	A2	A3	A4	A5	B1	B2	B3	B4	B5	B6	B7	C1	C2	C3	C4	D
X	X	X	MND	MND	MND	MND	MND	MND	MND	MND	MND	MND	MND	MND	MND	MND

Reference Service Life
Due to a cradle-to-gate declaration, a reference service life for steel products is not declared.

Scope

Temporal
All primary data were collected specific to the US. Where country / region specific secondary data were unavailable, proxy data were used but this is more an exception than the norm. Geographical representativeness is thus considered to be good.

Geographic
All primary data were collected for the year 2013. All secondary data come from the GaBi 2013 databases and are representative of the years 2009-2013. As the study intended to compare the product systems for the reference year 2013, temporal representativeness is good.

Data Quality Assessment

To ensure consistency, all primary data were collected with the same level of detail, while all background data were sourced from the GaBi databases. Allocation and other methodological choices were made consistently throughout the model.

Background Data

Most of the necessary life cycle inventories for the basic materials are available in the GaBi database. The last update of the database was 2013. Further LCIs for materials of the supply chain of the basic materials are approximated with LCIs of similar materials or estimated by the combination of available LCIs as documented in the background report. All datasets used in the major unit processes are provided in later sections of this report along with the description of the individual unit processes.

There is limited regional background data for steel that is specific to the US. We have there used the "NA: Steel hot dip galvanized" from worldsteel as the best available dataset for steel inputs. It must be noted that the worldsteel data set does not report waste and net water consumption flows as required by PCR. However, as the worldsteel methodology is in line with ISO 14044 allocation rules and is the best publicly available dataset for US steel, the use of this data set is justified. Water and waste indicators shall not be reported as explained in the background report.

Foreground Data

The foreground data collected by the manufacturer are based on yearly production amounts and extrapolations of measurements on specific machines and plants. The production data refer to an average of the year 2013.

Primary data for the production of DiamondPlus Coated products were collected by ClarkDietrich using a specifically developed spreadsheet provided by thinkstep. Cross-checks concerning the plausibility of mass and energy flows were carried out by thinkstep on the data received via email, telephone consultation and teleconferencing.

Statement of Comparability

Any comparison of EPD's shall be subject to the requirements of ISO 21930. For comparison of EPD's which report different module scopes, such that one EPD includes Module D and the other does not, the comparison shall only be made on the basis of Modules A1, A2, and A3. Additionally, when Module D is included in the EPD's being compared, all EPD's must use the same methodology for calculation of Module D values.

Declaration of Environmental Impact Derived from LCA

Disclaimer: This Environmental Product Declaration (EPD) conforms to ISO 14025, ISO 14040, ISO 14044, and ISO 21930.

Scope of Results Reported: The PCR requires the reporting of a limited set of LCA metrics; therefore, there may be relevant environmental impacts beyond those disclosed by this EPD. The EPD does not indicate that any environmental or social performance benchmarks are met nor thresholds exceeded.

Accuracy of Results: This EPD has been developed in accordance with the PCR applicable for the identified product following the principles, requirements and guidelines of the ISO 14040, ISO 14044, ISO 14025 and ISO 21930 standards. The results in this EPD are estimations of potential impacts. The accuracy of results in different EPD's may vary as a result of value choices, background data assumptions and quality of data collected.

Comparability: EPD's are not comparative assertions and are either not comparable or have limited comparability when they cover different life cycle stages, are based on different product category rules or are missing relevant environmental impacts. Such comparisons can be inaccurate, and could lead to the erroneous selection of materials or products which are higher - impact, at least in some impact categories. Any comparison of EPD's shall be subject to the requirements of ISO 21930. For comparison of EPD's which report different

module scopes, such that one EPD includes Module D and the other does not, the comparison shall only be made on the basis of Modules A1, A2, and A3. Additionally, when Module D is included in the EPD's being compared, all EPD's must use the same methodology for calculation of Module D values.

Parameters Describing Environmental Impacts

In accordance to the guiding PCR, the characterization method will be based on TRACI March 2012 v2.1 and CML 2012 v4.1.

Environmental impact: 1 metric ton of DiamondPlus coated product

Parameter	Unit	LCIA Method	A1 – A3
GWP	[metric ton CO_2-eq.]	TRACI (version 2.1)	2.76
ODP	[metric ton CFC11-eq.]	TRACI (version 2.1)	1.18E-07
AP	[metric ton SO_2-eq.]	TRACI (version 2.1)	0.0156
EP	[metric ton N eq.]	TRACI (version 2.1)	6.45E-04
Smog	[metric ton O_3 eq.]	TRACI (version 2.1)	0.215
ADPE*	[metric ton Sb eq.]	CML Baseline Method, Version 4.1 (October 2012)	4.84E-05
ADPF	[MJ]	CML Baseline Method, Version 4.1 (October 2012)	3.27E04

Caption	GWP = Global warming potential, excluding biogenic carbon; ODP = Depletion potential of the stratospheric ozone layer; AP = Acidification potential of land and water; EP = Eutrophication potential; ADPE = Abiotic depletion potential for non-fossil resources; ADPF = Abiotic depletion potential for fossil resources

* This indicator is based on assumptions regarding current reserves estimates. Users should use caution when interpreting results because there is insufficient information on which indicator is best for assessing the depletion of abiotic resources.

Parameters Describing Resource Use

Resource use: 1 metric of DiamondPlus coated product

Parameter	Unit	A1 – A3
PERE	[MJ]	1990
PERM	[MJ]	0
PERT	[MJ]	1990
PENRE	[MJ]	3490
PENRM	[MJ]	0
PENRT	[MJ]	3490
SM	[metric ton]	0.464
RSF	[MJ]	0
NRSF	[MJ]	0
FW	[M^3]	Not reported

Caption	PERE = Use of renewable primary energy as raw materials; PERM = Use of renewable primary energy as raw materials; PERT = Total use of renewable primary energy resources; PENRE = Use of non-renewable primary energy as raw materials; PENRM = Use of non-renewable primary energy d as raw materials; PENRT = Total use of non-renewable primary energy resources; SM = Use of secondary material; RSF = Use of renewable secondary fuels; NRSF = Use of non-renewable secondary fuels; FW = Use of net fresh water

Parameters Describing Waste Categories and Output Flows

Output flows and waste categories: 1 metric ton of DiamondPlus coated product

Parameter	Unit	A1- A3
HWD	[metric ton]	Not reported
NHWD	[metric ton]	Not reported
RWD	[metric ton]	Not reported
CRU	[metric ton]	0
MFR	[metric ton]	0.0665
MER	[metric ton]	0
EEE	[MJ]	0
EET	[MJ]	0

Caption	HWD = Hazardous waste disposed; NHWD = Non-hazardous waste disposed; RWD = Radioactive waste disposed; CRU = Components for re-use; MFR = Materials for recycling; MER = Materials for energy recovery; EEE = Exported electrical energy; EET = Exported thermal energy

FW, HWD, NHWD and RWD flows have not been reported as the worldsteel dataset used does report on waste and net water consumption flows in sufficient detail. The dataset is otherwise representative of the technology and conforms to ISO 14044.

Interpretation – DiamondPlus Coated

Module A1 dominates across all impact categories, contributing at least 90% of impacts in every category except for primary energy from renewable resources (PERT), where the contribution is lower at about 67%. For PERT, the higher A3 impacts come from the paper, corrugate and wood used in packaging, where the materials themselves embody renewable primary energy. With the exception of PERT, contributions from A3 range from 0–5% across the impact categories/indicators. As a whole, module A2 contributes very little, exhibiting a maximum contribution of about 2% in the case of Eutrophication potential (EP).

Cold-Formed Steel Framing by ClarkDietrich Building Systems

Health Product Declaration v2.1

created via: HPDC Online Builder

CLASSIFICATION: 05 40 00 - Cold-Formed Steel Framing

PRODUCT DESCRIPTION: To obtain cold-formed steel framing products with Residuals Disclosure levels of 1,000 ppm you must request mill certified steel when you place your order. If this request is made after manufacturing we cannot guarantee the desired Residuals Disclosure levels of 1,000 ppm. Base Metal: Steel. Base Metal Coating: Galvanized with Passivation (if applicable). Product ID - HPD covers Interior Framing Products, Interior Finishing Products, Exterior Framing Products, Floor Framing Products, Clips & Connectors, and Plaster Stucco & Veneer Products made of Cold-Formed Steel Framing. This includes, but is not limited to the following brand name products and systems, RedHeader PRO™ Rough Opening System, ProSTUD® Drywall Framing System, HDS®, MaxTrak®. Additional MasterSpecs: 09 22 16.00 Finishes:Non-Structural Metal Framing, 09 24 00 Finishes: Cement Plastering, 09 21 16.23 Finishes: Gypsum Board Shaft Wall Assemblies. SAFETY: Occupational Exposure Limits (OELs): Cold-Formed Steel Product as sold and shipped in its physical form does not present an inhalation, ingestion or contact hazard. However, operations such as burning, welding (high temperature), sawing, brazing, machining, grinding, etc. may produce fumes and/or particulates. Please refer to the ClarkDietrich Safety Data Sheet (SDS) for more information.

Section 1: Summary

Nested Method / Product Threshold

CONTENT INVENTORY

Inventory Reporting Format

- (●) Nested Materials Method
- ( ) Basic Method

Threshold Disclosed Per

- ( ) Material
- (●) Product

Threshold level

- ( ) 100 ppm
- (●) 1,000 ppm
- ( ) Per GHS SDS
- ( ) Per OSHA MSDS
- ( ) Other

Residuals/Impurities

Residuals/Impurities Considered in 0 of 3 Materials

Explanation(s) provided for Residuals/Impurities?

(●) Yes ( ) No

Are All Substances Above the Threshold Indicated:

Characterized (●) Yes ( ) No

Percent Weight and Role Provided?

Screened (●) Yes ( ) No

Using Priority Hazard Lists with Results Disclosed?

Identified (●) Yes ( ) No

Name and Identifier Provided?

CONTENT IN DESCENDING ORDER OF QUANTITY

Summary of product contents and results from screening individual chemical substances against HPD Priority Hazard Lists and the GreenScreen for Safer Chemicals®. The HPD does not assess whether using or handling this product will expose individuals to its chemical substances or any health risk. Refer to Section 2 for further details.

MATERIAL | **SUBSTANCE** | *RESIDUAL OR IMPURITY* GREENSCREEN SCORE | HAZARD TYPE

STEEL [IRON LT-P1 | END **MANGANESE** LT-P1 | END | MUL | REP **PHOSPHORUS** BM-2 | PHY | MAM **COPPER** LT-UNK **NICKEL** LT-1 | CAN | RES | SKI | MAM | MUL **CHROMIUM** LT-P1 | RES | END | SKI **MOLYBDENUM** LT-UNK **CARBON** LT-UNK **VANADIUM** LT-1 | MUL | CAN | GEN **NIOBIUM** LT-UNK **TITANIUM** LT-UNK **SULFUR** LT-UNK | SKI **] GALVANIZATION (COATING) [ZINC** LT-P1 | AQU | PHY | END | MUL **ALUMINUM** LT-P1 | RES | PHY | END **] PASSIVATION COATING [PHOSPHORIC ACID** LT-P1 | SKI **CHROMIUM (III) CHROMATE** LT-1 | CAN | DEL | REP | AQU | PHY | SKI | MUL | GEN **CHROMIUM (VI) OXIDE** LT-1 | RES | CAN | DEL | REP | GEN | AQU | PHY | MAM | SKI | MUL **PHOSPHORIC ACID, CHROMIUM(3++) SALT (1:1)** LT-P1 | SKI **CHROMIUM FLUORIDE (CRF3)** LT-P1 | SKI **HYDROFLUORIC ACID** BM-2 | MAM | SKI | MUL | PHY **CHROMIUM NITRATE** LT-P1 | SKI **MANGANESE, BIS(D-GLUCONATO-O1,O2)-, (T-4)-** LT-UNK **MANGANESE CITRATE** NoGS **SILICA, AMORPHOUS** LT-P1 | CAN **NITRIC ACID** LT-P1 | PHY | SKI | MAM **CHROMIUM (III) OXIDE** LT-P1 | SKI **]**

Number of Greenscreen BM-4/BM3 contents ... 0

Contents highest concern GreenScreen Benchmark or List translator Score ... LT-1

Nanomaterial ... No

INVENTORY AND SCREENING NOTES:

Per certification provided by steel mills.

VOLATILE ORGANIC COMPOUND (VOC) CONTENT

CERTIFICATIONS AND COMPLIANCE *See Section 3 for additional listings.*

VOC emissions: Inherently non- emitting source per LEED®

CONSISTENCY WITH OTHER PROGRAMS

Third Party Verified?

○ Yes

◉ No

PREPARER: Self-Prepared

VERIFIER:

VERIFICATION #:

SCREENING DATE: 2018-07-11

PUBLISHED DATE: 2018-07-15

EXPIRY DATE: 2021-07-11

Section 2: Content in Descending Order of Quantity

This section lists contents in a product based on specific threshold(s) and reports detailed health information including hazards. This HPD uses the inventory method indicated above, which is one of three possible methods:

- *Basic Inventory method with Product-level threshold.*
- *Nested Material Inventory method with Product-level threshold*
- *Nested Material Inventory method with individual Material-level thresholds*

Definitions and requirements for the three inventory methods and requirements for each data field can be found in the HPD Open Standard version 2.1, available on the HPDC website at: www.hpd-collaborative.org/hpd-2-1-standard

STEEL

%: 90.8200 - 99.6400

HPD URL:

PRODUCT THRESHOLD: 1000 ppm

RESIDUALS AND IMPURITIES CONSIDERED: No

RESIDUALS AND IMPURITIES NOTES: All commercial steel products contain small amounts of various elements in addition to those listed. These small quantities are frequently referred to as "trace" or "residual" elements that generally originate in the raw materials used. Steel products may contain the following trace or residual elements including typical percentages for the elements identified: aluminum (0.01-0.5), boron (≤0.005 max, typically 0.001%), calcium (≤ 0.005 max, typically 0.0003%), nitrogen (≤ 0.01 max, typically 0.006%), silicon (≤ 0.03 max, typically 0.002%), and tin (≤ 0.03 max, typically 0.002%). Other trace elements not frequently identified, may include antimony, arsenic, cadmium, cobalt, lead, and zirconium.

OTHER MATERIAL NOTES: Final percentage concentration of steel in the finished product depends on the ratio of steel (base metal) to the corrosion resistant galvanized coating. For example, a G90 coating on a 15-mil steel product represents 9.2% of the overall product weight, while a G40 coating on a 97-mil steel product only represents 0.4% of the overall product weight. These percentages will vary depending on the product mix ordered.

IRON

ID: 7439-89-6

%: 96.0600 - 97.8090 | GS: LT-P1 | RC: Both | NANO: No | ROLE: Base Metal

HAZARDS:	AGENCY(IES) WITH WARNINGS:	
ENDOCRINE	TEDX - Potential Endocrine Disruptors	Potential Endocrine Disruptor

SUBSTANCE NOTES:

MANGANESE

ID: 7439-96-5

%: 1.1500 - 1.6500 | GS: LT-P1 | RC: Both | NANO: No | ROLE: Alloying Metal

HAZARDS:	AGENCY(IES) WITH WARNINGS:	
ENDOCRINE	TEDX - Potential Endocrine Disruptors	Potential Endocrine Disruptor
MULTIPLE	German FEA - Substances Hazardous to Waters	Class 2 - Hazard to Waters
REPRODUCTIVE	Japan - GHS	Toxic to reproduction - Category 1B

SUBSTANCE NOTES:

PHOSPHORUS

ID: 7723-14-0

%: 0.2000 - 0.2300 | GS: BM-2 | RC: Both | NANO: No | ROLE: Alloying Metal

HAZARDS:	AGENCY(IES) WITH WARNINGS:	
PHYSICAL HAZARD (REACTIVE)	EU - GHS (H-Statements)	H228 - Flammable solid
MAMMALIAN	US EPA - EPCRA Extremely Hazardous Substances	Extremely Hazardous Substances

SUBSTANCE NOTES:

COPPER

ID: 7440-50-8

%: 0.2000 - 0.5000 | GS: LT-UNK | RC: Both | NANO: No | ROLE: Alloying Metal

HAZARDS:	AGENCY(IES) WITH WARNINGS:
None Found	No warnings found on HPD Priority lists

SUBSTANCE NOTES:

NICKEL

ID: 7440-02-0

%: 0.2000 - 0.3000 | GS: LT-1 | RC: None | NANO: No | ROLE: Alloying Metal

HAZARDS:	AGENCY(IES) WITH WARNINGS:	
CANCER	IARC	Group 1 - Agent is Carcinogenic to humans
CANCER	IARC	Group 2b - Possibly carcinogenic to humans
CANCER	CA EPA - Prop 65	Carcinogen
CANCER	US CDC - Occupational Carcinogens	Occupational Carcinogen
CANCER	US NIH - Report on Carcinogens	Reasonably Anticipated to be Human Carcinogen
RESPIRATORY	AOEC - Asthmagens	Asthmagen (ARs) - sensitizer-induced - inhalable forms only
SKIN SENSITIZE	EU - GHS (H-Statements)	H317 - May cause an allergic skin reaction
CANCER	EU - GHS (H-Statements)	H351 - Suspected of causing cancer
ORGAN TOXICANT	EU - GHS (H-Statements)	H372 - Causes damage to organs through prolonged or repeated exposure
MULTIPLE	German FEA - Substances Hazardous to Waters	Class 2 - Hazard to Waters
CANCER	MAK	Carcinogen Group 1 - Substances that cause cancer in man
RESPIRATORY	MAK	Sensitizing Substance Sah - Danger of airway & skin sensitization

SUBSTANCE NOTES:

CHROMIUM

ID: 7440-47-3

%: 0.1500 - 0.3000 | GS: LT-P1 | RC: Both | NANO: No | ROLE: Alloying Metal

HAZARDS:	AGENCY(IES) WITH WARNINGS:	
RESPIRATORY	AOEC - Asthmagens	Asthmagen (ARs) - sensitizer-induced - inhalable forms only
ENDOCRINE	TEDX - Potential Endocrine Disruptors	Potential Endocrine Disruptor
SKIN SENSITIZE	MAK	Sensitizing Substance Sh - Danger of skin sensitization

SUBSTANCE NOTES:

MOLYBDENUM

ID: 7439-98-7

%: 0.0600 - 0.1600 | GS: LT-UNK | RC: Both | NANO: No | ROLE: Alloying Metal

HAZARDS:	AGENCY(IES) WITH WARNINGS:
None Found	No warnings found on HPD Priority lists

SUBSTANCE NOTES:

CARBON

ID: 7440-44-0

%: 0.0300 - 0.2500 | GS: LT-UNK | RC: Both | NANO: No | ROLE: Alloying Metal

HAZARDS:	AGENCY(IES) WITH WARNINGS:
None Found	No warnings found on HPD Priority lists

SUBSTANCE NOTES:

VANADIUM

ID: 7440-62-2

%: 0.0080 - 0.2000 | GS: LT-1 | RC: Both | NANO: No | ROLE: Alloying Metal

HAZARDS:	AGENCY(IES) WITH WARNINGS:	
MULTIPLE	German FEA - Substances Hazardous to Waters	Class 3 - Severe Hazard to Waters
CANCER	MAK	Carcinogen Group 2 - Considered to be carcinogenic for man
GENE MUTATION	MAK	Germ Cell Mutagen 2

NIOBIUM

ID: 7440-03-1

%: 0.0080 - 0.1500 | GS: LT-UNK | RC: Both | NANO: No | ROLE: Alloying Metal

HAZARDS:	AGENCY(IES) WITH WARNINGS:
None Found	No warnings found on HPD Priority lists

SUBSTANCE NOTES:

TITANIUM

ID: 7440-32-6

%: 0.0080 - 0.2000 | GS: LT-UNK | RC: Both | NANO: No | ROLE: Alloying Metal

HAZARDS:	AGENCY(IES) WITH WARNINGS:
None Found	No warnings found on HPD Priority lists

SUBSTANCE NOTES:

SULFUR

ID: 7704-34-9

%: 0.0070 - 0.0400 | GS: LT-UNK | RC: Both | NANO: No | ROLE: Alloying Metal

HAZARDS:	AGENCY(IES) WITH WARNINGS:	
SKIN IRRITATION	EU - GHS (H-Statements)	H315 - Causes skin irritation

SUBSTANCE NOTES:

GALVANIZATION (COATING)

%: 0.3600 - 9.1800 | HPD URL:

PRODUCT THRESHOLD: 1000 ppm | RESIDUALS AND IMPURITIES CONSIDERED: No

RESIDUALS AND IMPURITIES NOTES: All commercial galvanizing products contain small amounts of various elements in addition to those listed. These small quantities of impurities are frequently referred to as "trace" or "residual" elements that generally originate in the raw or recycled materials used. Galvanizing products may contain the following trace or residual elements including typical maximum percentages for the elements identified: lead (0.01%), iron (0.01%), cadmium (0.01%), copper (0.01%), other elements (0.01%) balance by difference.

OTHER MATERIAL NOTES: The minimum and maximum percentages vary based on the thickness of base steel ordered and the level or corrosion protection ordered. For example a G40 coating on 97-mil sheet steel would only be 0.36% of the total weight, while a G90 coating on 15-mil sheet steel would be 9.18% of the total weight. This will vary depending on customer order requirements.

ZINC

ID: 7440-66-6

HAZARDS:	AGENCY(IES) WITH WARNINGS:	
ACUTE AQUATIC	EU - GHS (H-Statements)	H400 - Very toxic to aquatic life
CHRON AQUATIC	EU - GHS (H-Statements)	H410 - Very toxic to aquatic life with long lasting effects
PHYSICAL HAZARD (REACTIVE)	EU - GHS (H-Statements)	H250 - Catches fire spontaneously if exposed to air
PHYSICAL HAZARD (REACTIVE)	EU - GHS (H-Statements)	H260 - In contact with water releases flammable gases which may ignite spontaneously
ENDOCRINE	TEDX - Potential Endocrine Disruptors	Potential Endocrine Disruptor
MULTIPLE	German FEA - Substances Hazardous to Waters	Class 2 - Hazard to Waters

SUBSTANCE NOTES: Corrosion Protection

ALUMINUM

ID: 7429-90-5

%: 0.2500 - 1.0000 GS: LT-P1 RC: Both NANO: No ROLE: Corrosion Protection

HAZARDS:	AGENCY(IES) WITH WARNINGS:	
RESPIRATORY	AOEC - Asthmagens	Asthmagen (ARs) - sensitizer-induced - inhalable forms only
PHYSICAL HAZARD (REACTIVE)	EU - GHS (H-Statements)	H228 - Flammable solid
PHYSICAL HAZARD (REACTIVE)	EU - GHS (H-Statements)	H250 - Catches fire spontaneously if exposed to air
PHYSICAL HAZARD (REACTIVE)	EU - GHS (H-Statements)	H261 - In contact with water releases flammable gases
ENDOCRINE	TEDX - Potential Endocrine Disruptors	Potential Endocrine Disruptor

SUBSTANCE NOTES: Corrosion Protection

PASSIVATION COATING

%: 0.0080 - 0.0980 HPD URL:

PRODUCT THRESHOLD: 1000 ppm RESIDUALS AND IMPURITIES CONSIDERED: No

RESIDUALS AND IMPURITIES NOTES: These are highly controlled mixtures with no know impurities.

OTHER MATERIAL NOTES: Steel sheet coils are galvanized at the steel mill, and then as an industry standard an additional passivation coating, variations all commonly known as “chem treat”, is applied. This is an additional corrosion protection that helps prevent the formation of zinc oxide otherwise known as "white rust". There are many variations of "chem treat" used across the industry, and due to difficulties in tracing which specific "chem treat" was used on each order all possible hazardous components are listed here.

PHOSPHORIC ACID

ID: 7664-38-2

%: 10.0000 - 30.0000 GS: LT-P1 RC: UNK NANO: No ROLE: Corrosion Protection

SKIN IRRITATION	EU - GHS (H-Statements)	H314 - Causes severe skin burns and eye damage

SUBSTANCE NOTES: Corrosion Protection

CHROMIUM (III) CHROMATE

ID: 24613-89-6

%: 10.0000 - 20.0000 GS: LT-1 RC: UNK NANO: No ROLE: Corrosion Protection

HAZARDS:	AGENCY(IES) WITH WARNINGS:	
CANCER	IARC	Group 1 - Agent is Carcinogenic to humans
CANCER	CA EPA - Prop 65	Carcinogen
DEVELOPMENTAL	CA EPA - Prop 65	Developmental toxicity
REPRODUCTIVE	CA EPA - Prop 65	Reproductive Toxicity - Female
REPRODUCTIVE	CA EPA - Prop 65	Reproductive Toxicity - Male
CANCER	US CDC - Occupational Carcinogens	Occupational Carcinogen
CANCER	EU - SVHC Authorisation List	Carcinogenic - Banned unless Authorised
ACUTE AQUATIC	EU - GHS (H-Statements)	H400 - Very toxic to aquatic life
CHRON AQUATIC	EU - GHS (H-Statements)	H410 - Very toxic to aquatic life with long lasting effects
PHYSICAL HAZARD (REACTIVE)	EU - GHS (H-Statements)	H271 - May cause fire or explosion; strong oxidiser
SKIN IRRITATION	EU - GHS (H-Statements)	H314 - Causes severe skin burns and eye damage
SKIN SENSITIZE	EU - GHS (H-Statements)	H317 - May cause an allergic skin reaction
CANCER	EU - GHS (H-Statements)	H350 - May cause cancer
CANCER	EU - GHS (H-Statements)	H350i - May cause cancer by inhalation
CANCER	EU - REACH Annex XVII CMRs	Carcinogen Category 2 - Substances which should be regarded as if they are Carcinogenic to man
MULTIPLE	ChemSec - SIN List	CMR - Carcinogen, Mutagen &/or Reproductive Toxicant
MULTIPLE	German FEA - Substances Hazardous to Waters	Class 3 - Severe Hazard to Waters
CANCER	MAK	Carcinogen Group 1 - Substances that cause cancer in man
SKIN SENSITIZE	MAK	Sensitizing Substance Sh - Danger of skin sensitization
CANCER	Korea - GHS	Carcinogenicity - Category 1 [H350 - May cause cancer]
CANCER	EU - Annex VI CMRs	Carcinogen Category 1B - Presumed Carcinogen based on animal evidence
GENE MUTATION	MAK	Germ Cell Mutagen 2
GENE MUTATION	Australia - GHS	H340 - May cause genetic defects
CANCER	Australia - GHS	H350 - May cause cancer

SUBSTANCE NOTES: Corrosion Protection

CHROMIUM (VI) OXIDE

ID: 1333-82-0

%: 7.0000 - 13.0000 GS: LT-1 RC: UNK NANO: No ROLE: Corrosion Protection

HAZARDS:	AGENCY(IES) WITH WARNINGS:	
RESPIRATORY	AOEC - Asthmagens	Asthmagen (Rs) - sensitizer-induced
CANCER	IARC	Group 1 - Agent is Carcinogenic to humans
CANCER	CA EPA - Prop 65	Carcinogen
DEVELOPMENTAL	CA EPA - Prop 65	Developmental toxicity
REPRODUCTIVE	CA EPA - Prop 65	Reproductive Toxicity - Female
REPRODUCTIVE	CA EPA - Prop 65	Reproductive Toxicity - Male
CANCER	US CDC - Occupational Carcinogens	Occupational Carcinogen
CANCER	US NIH - Report on Carcinogens	Known to be a human Carcinogen
CANCER	EU - SVHC Authorisation List	Carcinogenic - Banned unless Authorised
GENE MUTATION	EU - SVHC Authorisation List	Mutagenic - Banned unless Authorised
ACUTE AQUATIC	EU - GHS (H-Statements)	H400 - Very toxic to aquatic life
CHRON AQUATIC	EU - GHS (H-Statements)	H410 - Very toxic to aquatic life with long lasting effects
PHYSICAL HAZARD (REACTIVE)	EU - GHS (H-Statements)	H271 - May cause fire or explosion; strong oxidiser
MAMMALIAN	EU - GHS (H-Statements)	H301 - Toxic if swallowed
MAMMALIAN	EU - GHS (H-Statements)	H311 - Toxic in contact with skin
SKIN IRRITATION	EU - GHS (H-Statements)	H314 - Causes severe skin burns and eye damage
SKIN SENSITIZE	EU - GHS (H-Statements)	H317 - May cause an allergic skin reaction
MAMMALIAN	EU - GHS (H-Statements)	H330 - Fatal if inhaled
RESPIRATORY	EU - GHS (H-Statements)	H334 - May cause allergy or asthma symptoms or breathing difficulties if inhaled
GENE MUTATION	EU - GHS (H-Statements)	H340 - May cause genetic defects
CANCER	EU - GHS (H-Statements)	H350 - May cause cancer
CANCER	EU - GHS (H-Statements)	H350i - May cause cancer by inhalation
REPRODUCTIVE	EU - GHS (H-Statements)	H361f - Suspected of damaging fertility
ORGAN TOXICANT	EU - GHS (H-Statements)	H372 - Causes damage to organs through prolonged or repeated exposure
CANCER	EU - REACH Annex XVII CMRs	Carcinogen Category 1 - Substances known to be Carcinogenic to man
GENE MUTATION	EU - REACH Annex XVII CMRs	Mutagen Category 2 - Substances which should be regarded as if they are Mutagenic to man

MULTIPLE	German FEA - Substances Hazardous to Waters	Class 3 - Severe Hazard to Waters
CANCER	MAK	Carcinogen Group 1 - Substances that cause cancer in man
SKIN SENSITIZE	MAK	Sensitizing Substance Sh - Danger of skin sensitization
CANCER	Korea - GHS	Carcinogenicity - Category 1 [H350 - May cause cancer]
CANCER	EU - Annex VI CMRs	Carcinogen Category 1A - Known human Carcinogen based on human evidence
GENE MUTATION	EU - Annex VI CMRs	Mutagen - Category 1B
GENE MUTATION	New Zealand - GHS	6.6A - Known or presumed human mutagens
CANCER	New Zealand - GHS	6.7A - Known or presumed human carcinogens
REPRODUCTIVE	New Zealand - GHS	6.8A - Known or presumed human reproductive or developmental toxicants
CANCER	Japan - GHS	Carcinogenicity - Category 1A
GENE MUTATION	Japan - GHS	Germ cell mutagenicity - Category 1B
REPRODUCTIVE	Japan - GHS	Toxic to reproduction - Category 1B
GENE MUTATION	MAK	Germ Cell Mutagen 2
CANCER	Australia - GHS	H350 - May cause cancer

SUBSTANCE NOTES: Corrosion Protection

PHOSPHORIC ACID, CHROMIUM(3++) SALT (1:1)

ID: 7789-04-0

%: 1.0000 - 10.0000 GS: LT-P1 RC: UNK NANO: No ROLE: Corrosion Protection

HAZARDS:	AGENCY(IES) WITH WARNINGS:	
SKIN SENSITIZE	MAK	Sensitizing Substance Sh - Danger of skin sensitization

SUBSTANCE NOTES: Corrosion Protection

CHROMIUM FLUORIDE (CRF3)

ID: 7788-97-8

%: 1.0000 - 5.0000 GS: LT-P1 RC: UNK NANO: No ROLE: Corrosion Protection

HAZARDS:	AGENCY(IES) WITH WARNINGS:	
SKIN SENSITIZE	MAK	Sensitizing Substance Sh - Danger of skin sensitization

SUBSTANCE NOTES: Corrosion Protection

HYDROFLUORIC ACID

ID: 7664-39-3

%: 1.0000 - 5.0000 GS: BM-2 RC: UNK NANO: No ROLE: Corrosion Protection

HAZARDS:	AGENCY(IES) WITH WARNINGS:	
MAMMALIAN	EU - GHS (H-Statements)	H300 - Fatal if swallowed
MAMMALIAN	EU - GHS (H-Statements)	H310 - Fatal in contact with skin
SKIN IRRITATION	EU - GHS (H-Statements)	H314 - Causes severe skin burns and eye damage
MAMMALIAN	EU - GHS (H-Statements)	H330 - Fatal if inhaled
MULTIPLE	German FEA - Substances Hazardous to Waters	Class 2 - Hazard to Waters
MAMMALIAN	US EPA - EPCRA Extremely Hazardous Substances	Extremely Hazardous Substances
PHYSICAL HAZARD (REACTIVE)	Korea - GHS	H290 - May be corrosive to metals

SUBSTANCE NOTES: Corrosion Protection

CHROMIUM NITRATE

ID: 13548-38-4

%: 1.0000 - 5.0000 GS: LT-P1 RC: UNK NANO: No ROLE: Corrosion Protection

HAZARDS:	AGENCY(IES) WITH WARNINGS:	
SKIN SENSITIZE	MAK	Sensitizing Substance Sh - Danger of skin sensitization

SUBSTANCE NOTES: Corrosion Protection

MANGANESE, BIS(D-GLUCONATO-O1,O2)-, (T-4)-

ID: 6485-39-8

%: 1.0000 - 10.0000 GS: LT-UNK RC: UNK NANO: No ROLE: Corrosion Protection

HAZARDS:	AGENCY(IES) WITH WARNINGS:
None Found	No warnings found on HPD Priority lists

SUBSTANCE NOTES: Corrosion Protection

MANGANESE CITRATE

ID: 10024-66-5

%: 1.0000 - 5.0000 GS: NoGS RC: UNK NANO: No ROLE: Corrosion Protection

HAZARDS:	AGENCY(IES) WITH WARNINGS:
None Found	No warnings found on HPD Priority lists

SILICA, AMORPHOUS

ID: 7631-86-9

%: 1.0000 - 5.0000 GS: LT-P1 RC: UNK NANO: No ROLE: Corrosion Protection

HAZARDS:	AGENCY(IES) WITH WARNINGS:	
CANCER	Japan - GHS	Carcinogenicity - Category 1A

SUBSTANCE NOTES: Corrosion Protection

NITRIC ACID

ID: 7697-37-2

%: 1.0000 - 5.0000 GS: LT-P1 RC: UNK NANO: No ROLE: Corrosion Protection

HAZARDS:	AGENCY(IES) WITH WARNINGS:	
PHYSICAL HAZARD (REACTIVE)	EU - GHS (H-Statements)	H272 - May intensify fire; oxidiser
SKIN IRRITATION	EU - GHS (H-Statements)	H314 - Causes severe skin burns and eye damage
MAMMALIAN	US EPA - EPCRA Extremely Hazardous Substances	Extremely Hazardous Substances
PHYSICAL HAZARD (REACTIVE)	Korea - GHS	H271 - May cause fire or explosion; strong oxidizer

SUBSTANCE NOTES: Corrosion Protection

CHROMIUM (III) OXIDE

ID: 1308-38-9

%: 0.1000 - 1.0000 GS: LT-P1 RC: UNK NANO: No ROLE: Corrosion Protection

HAZARDS:	AGENCY(IES) WITH WARNINGS:	
SKIN SENSITIZE	MAK	Sensitizing Substance Sh - Danger of skin sensitization

SUBSTANCE NOTES: Corrosion Protection

Section 3: Certifications and Compliance

This section lists applicable certification and standards compliance information for VOC emissions and VOC content. Other types of health or environmental performance testing or certifications completed for the product may be provided.

VOC EMISSIONS — **Inherently non- emitting source per LEED®**

CERTIFYING PARTY: Self-declared
APPLICABLE FACILITIES: All ClarkDietrich manufacturing plants listed on the website. https://www.clarkdietrich.com/about-us/locations.
CERTIFICATE URL:

ISSUE DATE: 2018-07-11
EXPIRY DATE:
CERTIFIER OR LAB: LEED

CERTIFICATION AND COMPLIANCE NOTES: Cold-Formed Steel Framing is considered an inherently non- emitting source per LEED®

Section 4: Accessories

This section lists related products or materials that the manufacturer requires or recommends for installation (such as adhesives or fasteners), maintenance, cleaning, or operations. For information relating to the contents of these related products, refer to their applicable Health Product Declarations, if available.

STEEL TAPPING SCREWS FOR COLD-FORMED STEEL FRAMING CONNECTIONS

HPD URL: **No HPD available**

CONDITION WHEN RECOMMENDED OR REQUIRED AND/OR OTHER NOTES:
Self-drilling and self-piercing screws (per ASTM C1513) are used to connect cold-formed steel framing members together in preparation to receive gypsum panel products.

Section 5: General Notes

ClarkDietrich Building Systems offers a comprehensive lineup of steel construction products and services across the United States and abroad. Using cold-formed steel, we manufacture innovative products for interior framing, interior finishing, exterior framing, floor and roof framing, as well as clips, connectors, metal lath, barrier mesh and accessories. As the demands for higher performance in all aspects of today's buildings rise, we partner with teams of architects, engineers, building developers and owners, contractors, and more on projects of all sizes, scope, and complexity. Far beyond products, our collaborations increasingly involve efforts and expertise that support smarter installation and design, including resources for BIM and ClarkDietrich Engineering Services LLC. Formed in 2011 through the combination of two established market leaders—ClarkWestern Building Systems and Dietrich Metal Framing—ClarkDietrich is in an unprecedented position to help you bring change to the built environment.

Section 6: References

MANUFACTURER INFORMATION

MANUFACTURER: **ClarkDietrich Building Systems**
ADDRESS: **9050 Centre Pointe Drive #400**
West Chester Ohio 45069, United States
WEBSITE: **www.clarkdietrich.com**

CONTACT NAME: **Adam Shoemaker**
TITLE: **Technical Services**
PHONE: **(888) 437-3244**
EMAIL: **adam.shoemaker@clarkdietrich.com**

KEY

OSHA MSDS Occupational Safety and Health Administration Material Safety Data Sheet
GHS SDS Globally Harmonized System of Classification and Labeling of Chemicals Safety Data Sheet

Hazard Types

AQU Aquatic toxicity
CAN Cancer
DEV Developmental toxicity
END Endocrine activity
EYE Eye irritation/corrosivity
GEN Gene mutation
GLO Global warming
MAM Mammalian/systemic/organ toxicity
MUL Multiple hazards
NEU Neurotoxicity
OZO Ozone depletion
PBT Persistent Bioaccumulative Toxic
PHY Physical Hazard (reactive)
REP Reproductive toxicity
RES Respiratory sensitization
SKI Skin sensitization/irritation/corrosivity
LAN Land Toxicity
NF Not found on Priority Hazard Lists

GreenScreen (GS)

BM-4 Benchmark 4 (prefer-safer chemical)
BM-3 Benchmark 3 (use but still opportunity for improvement)
BM-2 Benchmark 2 (use but search for safer substitutes)
BM-1 Benchmark 1 (avoid - chemical of high concern)
BM-U Benchmark Unspecified (insuficient data to benchmark)
LT-P1 List Translator Possible Benchmark 1
LT-1 List Translator Likely Benchmark 1
LT-UNK List Translator Benchmark Unknown (insufficient information from List Translator lists to benchmark)
NoGS Unknown (no data on List Translator Lists)

Recycled Types

PreC Preconsumer (Post-Industrial)
PostC Postconsumer
Both Both Preconsumer and Postconsumer
Unk Inclusion of recycled content is unknown
None Does not include recycled content

Other Terms

Inventory Methods:

Nested Method / Material Threshold Substances listed within each material per threshold indicated per material
Nested Method / Product Threshold Substances listed within each material per threshold indicated per product
Basic Method / Product Threshold Substances listed individually per threshold indicated per product

Nano Composed of nano scale particles or nanotechnology
Third Party Verified Verification by independent certifier approved by HPDC
Preparer Third party preparer, if not self-prepared by manufacturer
Applicable facilities Manufacturing sites to which testing applies

The Health Product Declaration (HPD) Open Standard provides for the disclosure of product contents and potential associated human and environmental health hazards. Hazard associations are based on the HPD Priority Hazard Lists, the GreenScreen List Translator™, and when available, full GreenScreen® assessments. The HPD Open Standard v2.1 is not:

- *a method for the assessment of exposure or risk associated with product handling or use,*
- *a method for assessing potential health impacts of: (i) substances used or created during the manufacturing process or (ii) substances created after the product is delivered for end use.*

Information about life cycle, exposure and/or risk assessments performed on the product may be reported by the manufacturer in appropriate Notes sections, and/or, where applicable, in the Certifications section.

The HPD Open Standard was created and is supported by the Health Product Declaration Collaborative (the HPD Collaborative), a customer-led organization composed of stakeholders throughout the building industry that is committed to the continuous improvement of building products through transparency, openness, and innovation throughout the product supply chain.

The product manufacturer and any applicable independent verifier are solely responsible for the accuracy of statements and claims made in this HPD and for compliance with the HPD standard noted.

Product submittal information for:

Exterior Framing

600S250-97 (50ksi, CP60) P
600S162-43 (33ksi, CP60) P
600S200-54 (50ksi, CP60) P
800S162-43 (33ksi, CP60) P
800S200-54 (50ksi, CP60) P
600S162-54 (50ksi, CP60) P
250S162-43 (33ksi, CP60) P
600T125-43 (33ksi, CP60)
600T125-54 (50ksi, CP60)
600T200-54 (50ksi, CP60)
CD MaxTrak (SLT) 3" Leg

Clips / Accessories

X973
X545
X685
X975
E685
FCEC12 - 14ga
FTC5

Developed using CD SubmittalPro System
https://www.itools.clarkdietrich.com

ClarkDietrich®

SUBMITTAL

For the proposed new construction of:
Garrett College

Date created: 3/5/21
Project Number:
Purchase Order:
Estimated Ship Date:
Project Notes:

Contractor Information:
Leonard S. Fiore, Inc

GC Information:

Architect Information:

Distributor Information:
Foundation Building Materials
435 Rolling Ridge Drive
Bellefonte PA 16823

ClarkDietrich™
ENGINEERING SERVICES

For product technical & engineering support
call ClarkDietrich's Tech Support: (888) 437-3244

Product Submittal Sheet

Technical Services: 888-437-3244
Engineering Services: 877-832-3206

Sales: 800-543-7140
clarkdietrich.com

Product category: S250 (2-1/2" Flange Structural Stud)
Product name: **600S250-97 (50ksi, CP60) P - Punched**
97mils (12ga)

Coating: CP60 per ASTM C955
Color coding: Red

05.40.00 (Cold-Formed Metal Framing)

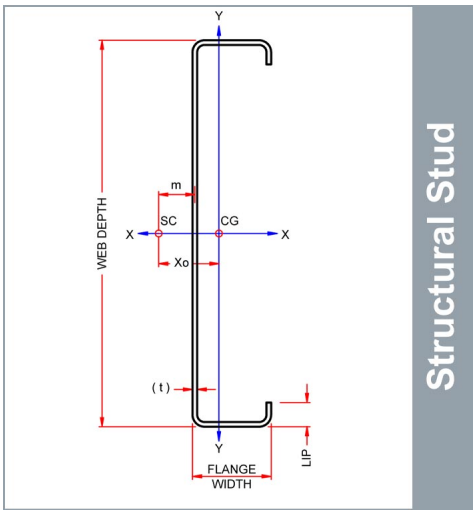

Geometric Properties

Web depth	6.000 in		
Flange width	2.500 in	Punchout width	1.50 in
Stiffening lip	0.625 in	Punchout length	4.00 in
Design thickness	0.1017 in	Min. steel thickness	0.0966 in
Yield strength, Fy	50 ksi	Fy with Cold-Work, Fya	56.2 ksi
Ultimate, Fu	65.0 ksi		

Gross Section Properties of Full Section, Strong Axis

Cross sectional area (A)	1.169 in^2
Member weight per foot of length	3.98 lb/ft
Moment of inertia (Ix)	6.498 in^4
Section modulus (Sx)	2.166 in^3
Radius of gyration (Rx)	2.358 in
Gross moment of inertia (Iy)	0.923 in^4
Gross radius of gyration (Ry)	0.889 in

Effective Section Properties, Strong Axis

Effective Area (Ae)	0.823 in^2
Moment of inertia for deflection (Ix)	6.497 in^4
Section modulus (Sx)	2.063 in^3
Allowable bending moment (Ma)	69.39 in-k
Allowable moment based on distortion buckling (Mad)	59.34 in-k
Allowable shear force in web (solid section)	10472 lb
Allowable shear force in web (perforated section)	3806 lb
Unbraced length (Lu)	47.3 in

Torsional Properties

St. Venant torsion constant (J x 1000)	4.030 in^4
Warping constant (Cw)	6.947 in^6
Distance from shear center to neutral axis (Xo)	-1.803 in
Distance between shear center and web centerline (m)	1.100 in
Radii of gyration (Ro)	3.099 in
Torsional flexural constant (Beta)	0.661

Used in framing applications:

- **Load-bearing walls**
- **Curtain walls**
- **Tall interior walls**
- **Floor & ceiling joists**
- **Trusses**

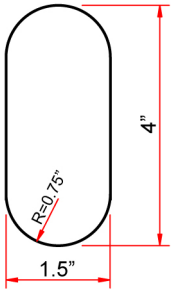

Structural Punchout

East market punchout spacing:
12" from lead end then 24" o.c.

West market punchout spacing:
24" from lead end then 24" o.c.

ASTM & Code Standards:

- AISI North American Specification [NASPEC] S100-16
- * Effective properties incorporate the strength increase from the cold work of forming
- Gross properties are based on the cross section away from the punchouts
- Structural framing is produced to meet or exceed ASTM C955
- Sheet steel meets or exceeds mechanical and chemical requirements of ASTM A1003
- ClarkDietrich's structural and nonstructural framing comply with the SFIA Code Compliance Certification Program, ICC-ES ESR-1166P and Intertek CCRR-0206
- For installation & storage information refer to ASTM C1007
- SDS & Product Certification Information is available at itools.clarkdietrich.com

Sustainability Credits:
For more details and LEED letters contact Technical Services at 888-437-3244 or visit www.clarkdietrich.com/LEED
LEED v4 MR Credit -- Building Product Disclosure and Optimization: EPD (1 point) - Sourcing of Raw Materials (1 point) - Material Ingredients (1 point) - Construction and Demolition Waste Management (up to 2 points) - Innovation Credit (up to 2 points).
LEED 2009 Credit MR 2 & MR 4 -- ClarkDietrich's steel products are 100% recyclable and have a national average recycled content of 34.2% (19.8% post-consumer and 14.4% pre-consumer). If seeking a higher number to meet Credit MR 5, please contact us at (info@clarkdietrich.com / 888-437-3244)

Project Information	Contractor Information	Architect Information
Name: Garrett College	Name: Leonard S. Fiore, Inc	Name:
Address:	Contact:	Contact:
	Phone:	Phone:
	Fax:	Fax:

CD-STRS © 07/20 ClarkDietrich Building Systems

Product Submittal Sheet

Technical Services: 888-437-3244
Engineering Services: 877-832-3206

Sales: 800-543-7140
clarkdietrich.com

Product category: S162 (1-5/8" Flange Structural Stud)
Product name: **600S162-43 (33ksi, CP60) P - Punched**
43mils (18ga)

Coating: CP60 per ASTM C955
Color coding: Yellow

05.40.00 (Cold-Formed Metal Framing)

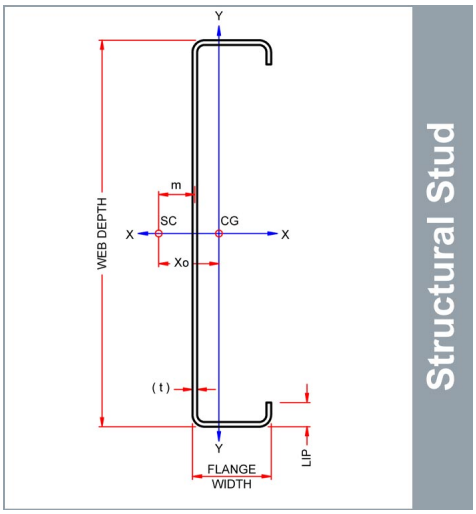

Geometric Properties

Web depth	6.000 in		
Flange width	1.625 in	Punchout width	1.50 in
Stiffening lip	0.500 in	Punchout length	4.00 in
Design thickness	0.0451 in	Min. steel thickness	0.0428 in
Yield strength, Fy	33 ksi	Fy with Cold-Work, Fya	36.3 ksi
Ultimate, Fu	45.0 ksi		

Gross Section Properties of Full Section, Strong Axis

Cross sectional area (A)	0.447 in^2
Member weight per foot of length	1.52 lb/ft
Moment of inertia (Ix)	2.316 in^4
Section modulus (Sx)	0.772 in^3
Radius of gyration (Rx)	2.277 in
Gross moment of inertia (Iy)	0.148 in^4
Gross radius of gyration (Ry)	0.576 in

Effective Section Properties, Strong Axis

Effective Area (Ae)	0.256 in^2
Moment of inertia for deflection (Ix)	2.316 in^4
Section modulus (Sx)	0.767 in^3
Allowable bending moment (Ma)	16.68 in-k
Allowable moment based on distortion buckling (Mad)	13.06 in-k
Allowable shear force in web (solid section)	1416 lb
Allowable shear force in web (perforated section)	1240 lb
Unbraced length (Lu)	39.0 in

Torsional Properties

St. Venant torsion constant (J x 1000)	0.303 in^4
Warping constant (Cw)	1.095 in^6
Distance from shear center to neutral axis (Xo)	-1.062 in
Distance between shear center and web centerline (m)	0.670 in
Radii of gyration (Ro)	2.577 in
Torsional flexural constant (Beta)	0.830

Used in framing applications:

- **Load-bearing walls**
- **Curtain walls**
- **Tall interior walls**
- **Floor & ceiling joists**
- **Trusses**

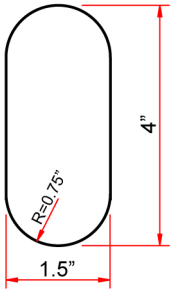

Structural Punchout

East market punchout spacing:
12" from lead end then 24" o.c.

West market punchout spacing:
24" from lead end then 24" o.c.

ASTM & Code Standards:

- AISI North American Specification [NASPEC] S100-16
- * Effective properties incorporate the strength increase from the cold work of forming
- Gross properties are based on the cross section away from the punchouts
- Structural framing is produced to meet or exceed ASTM C955
- Sheet steel meets or exceeds mechanical and chemical requirements of ASTM A1003
- ClarkDietrich's structural and nonstructural framing comply with the SFIA Code Compliance Certification Program, ICC-ES ESR-1166P and Intertek CCRR-0206
- For installation & storage information refer to ASTM C1007
- SDS & Product Certification Information is available at itools.clarkdietrich.com

Sustainability Credits:
For more details and LEED letters contact Technical Services at 888-437-3244 or visit www.clarkdietrich.com/LEED
LEED v4 MR Credit -- Building Product Disclosure and Optimization: EPD (1 point) - Sourcing of Raw Materials (1 point) - Material Ingredients (1 point) - Construction and Demolition Waste Management (up to 2 points) - Innovation Credit (up to 2 points).
LEED 2009 Credit MR 2 & MR 4 -- ClarkDietrich's steel products are 100% recyclable and have a national average recycled content of 34.2% (19.8% post-consumer and 14.4% pre-consumer). If seeking a higher number to meet Credit MR 5, please contact us at (info@clarkdietrich.com / 888-437-3244)

Project Information	Contractor Information	Architect Information
Name: Garrett College	Name: Leonard S. Fiore, Inc	Name:
Address:	Contact:	Contact:
	Phone:	Phone:
	Fax:	Fax:

CD-STRS © 07/20 ClarkDietrich Building Systems

Product Submittal Sheet

Technical Services: 888-437-3244
Engineering Services: 877-832-3206

Sales: 800-543-7140
clarkdietrich.com

Product category: S200 (2" Flange Structural Stud)
Product name: **600S200-54 (50ksi, CP60) P - Punched**
54mils (16ga)

Coating: CP60 per ASTM C955
Color coding: Green

05.40.00 (Cold-Formed Metal Framing)

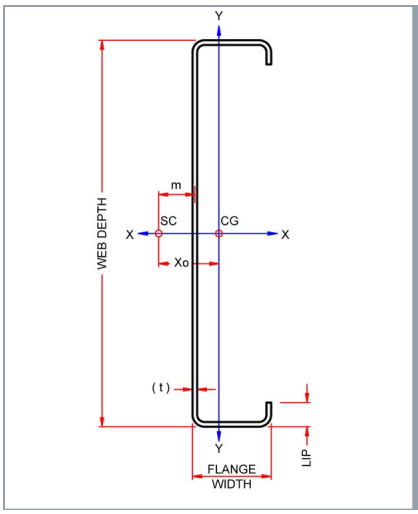

Geometric Properties

Web depth	6.000 in		
Flange width	2.000 in	Punchout width	1.50 in
Stiffening lip	0.625 in	Punchout length	4.00 in
Design thickness	0.0566 in	Min. steel thickness	0.0538 in
Yield strength, Fy	50 ksi	Fy with Cold-Work, Fya	50.0 ksi
Ultimate, Fu	65.0 ksi		

Gross Section Properties of Full Section, Strong Axis

Cross sectional area (A)	0.613 in^2
Member weight per foot of length	2.09 lb/ft
Moment of inertia (Ix)	3.320 in^4
Section modulus (Sx)	1.107 in^3
Radius of gyration (Rx)	2.327 in
Gross moment of inertia (Iy)	0.329 in^4
Gross radius of gyration (Ry)	0.732 in

Effective Section Properties, Strong Axis

Effective Area (Ae)	0.332 in^2
Moment of inertia for deflection (Ix)	3.319 in^4
Section modulus (Sx)	1.015 in^3
Allowable bending moment (Ma)	30.40 in-k
Allowable moment based on distortion buckling (Mad)	26.42 in-k
Allowable shear force in web (solid section)	2823 lb
Allowable shear force in web (perforated section)	1947 lb
Unbraced length (Lu)	41.6 in

Torsional Properties

St. Venant torsion constant (J x 1000)	0.655 in^4
Warping constant (Cw)	2.493 in^6
Distance from shear center to neutral axis (Xo)	-1.432 in
Distance between shear center and web centerline (m)	0.887 in
Radii of gyration (Ro)	2.829 in
Torsional flexural constant (Beta)	0.744

Used in framing applications:

- **Load-bearing walls**
- **Curtain walls**
- **Tall interior walls**
- **Floor & ceiling joists**
- **Trusses**

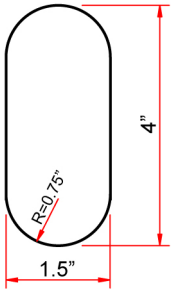

Structural Punchout

East market punchout spacing:
12" from lead end then 24" o.c.

West market punchout spacing:
24" from lead end then 24" o.c.

ASTM & Code Standards:

- AISI North American Specification [NASPEC] S100-16
- * Effective properties incorporate the strength increase from the cold work of forming
- Gross properties are based on the cross section away from the punchouts
- Structural framing is produced to meet or exceed ASTM C955
- Sheet steel meets or exceeds mechanical and chemical requirements of ASTM A1003
- ClarkDietrich's structural and nonstructural framing comply with the SFIA Code Compliance Certification Program, ICC-ES ESR-1166P and Intertek CCRR-0206
- For installation & storage information refer to ASTM C1007
- SDS & Product Certification Information is available at itools.clarkdietrich.com

Sustainability Credits:
For more details and LEED letters contact Technical Services at 888-437-3244 or visit www.clarkdietrich.com/LEED
LEED v4 MR Credit -- Building Product Disclosure and Optimization: EPD (1 point) - Sourcing of Raw Materials (1 point) - Material Ingredients (1 point) - Construction and Demolition Waste Management (up to 2 points) - Innovation Credit (up to 2 points).
LEED 2009 Credit MR 2 & MR 4 -- ClarkDietrich's steel products are 100% recyclable and have a national average recycled content of 34.2% (19.8% post-consumer and 14.4% pre-consumer). If seeking a higher number to meet Credit MR 5, please contact us at (info@clarkdietrich.com / 888-437-3244)

Project Information	Contractor Information	Architect Information
Name: Garrett College	Name: Leonard S. Fiore, Inc	Name:
Address:	Contact:	Contact:
	Phone:	Phone:
	Fax:	Fax:

CD-STRS © 07/20 ClarkDietrich Building Systems

Product Submittal Sheet

Technical Services: 888-437-3244
Engineering Services: 877-832-3206
Sales: 800-543-7140
clarkdietrich.com

Product category: S162 (1-5/8" Flange Structural Stud)
Product name: **800S162-43 (33ksi, CP60) P - Punched**
43mils (18ga)
Coating: CP60 per ASTM C955
Color coding: Yellow

05.40.00 (Cold-Formed Metal Framing)

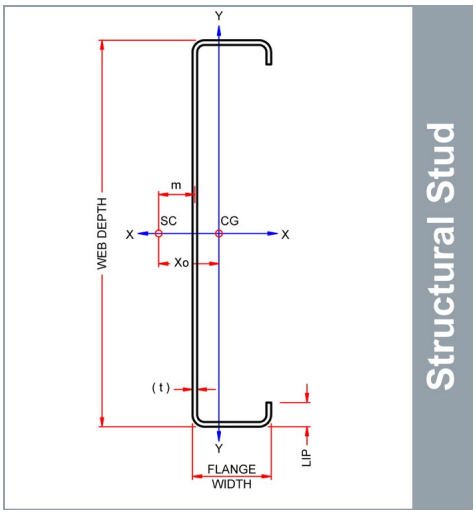

Geometric Properties

Web depth	8.000 in		
Flange width	1.625 in	Punchout width	1.50 in
Stiffening lip	0.500 in	Punchout length	4.00 in
Design thickness	0.0451 in	Min. steel thickness	0.0428 in
Yield strength, Fy	33 ksi	Fy with Cold-Work, Fya	33.0 ksi
Ultimate, Fu	45.0 ksi		

Gross Section Properties of Full Section, Strong Axis

Cross sectional area (A)	0.537 in^2
Member weight per foot of length	1.83 lb/ft
Moment of inertia (Ix)	4.635 in^4
Section modulus (Sx)	1.159 in^3
Radius of gyration (Rx)	2.938 in
Gross moment of inertia (Iy)	0.160 in^4
Gross radius of gyration (Ry)	0.546 in

Effective Section Properties, Strong Axis

Effective Area (Ae)	0.258 in^2
Moment of inertia for deflection (Ix)	4.500 in^4
Section modulus (Sx)	1.019 in^3
Allowable bending moment (Ma)	20.14 in-k
Allowable moment based on distortion buckling (Mad)	17.72 in-k
Allowable shear force in web (solid section)	1051 lb
Allowable shear force in web (perforated section)	1051 lb
Unbraced length (Lu)	39.8 in

Torsional Properties

St. Venant torsion constant (J x 1000)	0.364 in^4
Warping constant (Cw)	2.076 in^6
Distance from shear center to neutral axis (Xo)	-0.926 in
Distance between shear center and web centerline (m)	0.601 in
Radii of gyration (Ro)	3.128 in
Torsional flexural constant (Beta)	0.912

Used in framing applications:

- **Load-bearing walls**
- **Curtain walls**
- **Tall interior walls**
- **Floor & ceiling joists**
- **Trusses**

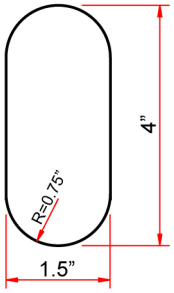

Structural Punchout

East market punchout spacing:
12" from lead end then 24" o.c.

West market punchout spacing:
24" from lead end then 24" o.c.

ASTM & Code Standards:

- AISI North American Specification [NASPEC] S100-16
- * Effective properties incorporate the strength increase from the cold work of forming
- Gross properties are based on the cross section away from the punchouts
- Structural framing is produced to meet or exceed ASTM C955
- Sheet steel meets or exceeds mechanical and chemical requirements of ASTM A1003
- ClarkDietrich's structural and nonstructural framing comply with the SFIA Code Compliance Certification Program, ICC-ES ESR-1166P and Intertek CCRR-0206
- For installation & storage information refer to ASTM C1007
- SDS & Product Certification Information is available at itools.clarkdietrich.com

Sustainability Credits:
For more details and LEED letters contact Technical Services at 888-437-3244 or visit www.clarkdietrich.com/LEED
LEED v4 MR Credit -- Building Product Disclosure and Optimization: EPD (1 point) - Sourcing of Raw Materials (1 point) - Material Ingredients (1 point) - Construction and Demolition Waste Management (up to 2 points) - Innovation Credit (up to 2 points).
LEED 2009 Credit MR 2 & MR 4 -- ClarkDietrich's steel products are 100% recyclable and have a national average recycled content of 34.2% (19.8% post-consumer and 14.4% pre-consumer). If seeking a higher number to meet Credit MR 5, please contact us at (info@clarkdietrich.com / 888-437-3244)

Project Information	Contractor Information	Architect Information
Name: Garrett College	Name: Leonard S. Fiore, Inc	Name:
Address:	Contact:	Contact:
	Phone:	Phone:
	Fax:	Fax:

CD-STRS © 07/20 ClarkDietrich Building Systems

Product Submittal Sheet

Technical Services: 888-437-3244
Engineering Services: 877-832-3206

Sales: 800-543-7140
clarkdietrich.com

Product category: S200 (2" Flange Structural Stud)
Product name: **800S200-54 (50ksi, CP60) P - Punched**
54mils (16ga)

Coating: CP60 per ASTM C955
Color coding: Green

05.40.00 (Cold-Formed Metal Framing)

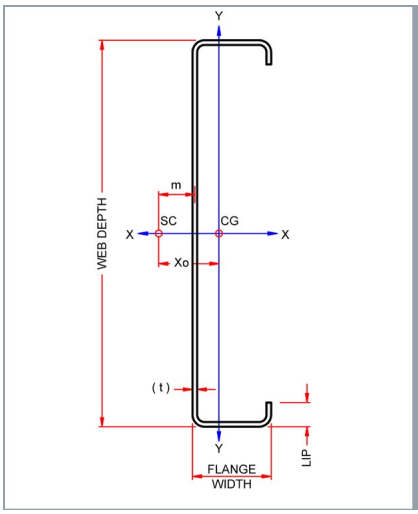

Geometric Properties

Web depth	8.000 in		
Flange width	2.000 in	Punchout width	1.50 in
Stiffening lip	0.625 in	Punchout length	4.00 in
Design thickness	0.0566 in	Min. steel thickness	0.0538 in
Yield strength, Fy	50 ksi	Fy with Cold-Work, Fya	50.0 ksi
Ultimate, Fu	65.0 ksi		

Gross Section Properties of Full Section, Strong Axis

Cross sectional area (A)	0.726 in^2
Member weight per foot of length	2.47 lb/ft
Moment of inertia (Ix)	6.574 in^4
Section modulus (Sx)	1.644 in^3
Radius of gyration (Rx)	3.009 in
Gross moment of inertia (Iy)	0.357 in^4
Gross radius of gyration (Ry)	0.701 in

Effective Section Properties, Strong Axis

Effective Area (Ae)	0.335 in^2
Moment of inertia for deflection (Ix)	6.573 in^4
Section modulus (Sx)	1.499 in^3
Allowable bending moment (Ma)	44.87 in-k
Allowable moment based on distortion buckling (Mad)	36.18 in-k
Allowable shear force in web (solid section)	2091 lb
Allowable shear force in web (perforated section)	2091 lb
Unbraced length (Lu)	40.7 in

Torsional Properties

St. Venant torsion constant (J x 1000)	0.775 in^4
Warping constant (Cw)	4.663 in^6
Distance from shear center to neutral axis (Xo)	-1.265 in
Distance between shear center and web centerline (m)	0.804 in
Radii of gyration (Ro)	3.338 in
Torsional flexural constant (Beta)	0.856

Used in framing applications:

- **Load-bearing walls**
- **Curtain walls**
- **Tall interior walls**
- **Floor & ceiling joists**
- **Trusses**

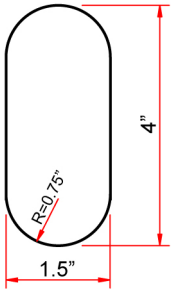

Structural Punchout

East market punchout spacing:
12" from lead end then 24" o.c.

West market punchout spacing:
24" from lead end then 24" o.c.

ASTM & Code Standards:

- AISI North American Specification [NASPEC] S100-16
- * Effective properties incorporate the strength increase from the cold work of forming
- Gross properties are based on the cross section away from the punchouts
- Structural framing is produced to meet or exceed ASTM C955
- Sheet steel meets or exceeds mechanical and chemical requirements of ASTM A1003
- ClarkDietrich's structural and nonstructural framing comply with the SFIA Code Compliance Certification Program, ICC-ES ESR-1166P and Intertek CCRR-0206
- For installation & storage information refer to ASTM C1007
- SDS & Product Certification Information is available at itools.clarkdietrich.com

Sustainability Credits:
For more details and LEED letters contact Technical Services at 888-437-3244 or visit www.clarkdietrich.com/LEED
LEED v4 MR Credit -- Building Product Disclosure and Optimization: EPD (1 point) - Sourcing of Raw Materials (1 point) - Material Ingredients (1 point) - Construction and Demolition Waste Management (up to 2 points) - Innovation Credit (up to 2 points).
LEED 2009 Credit MR 2 & MR 4 -- ClarkDietrich's steel products are 100% recyclable and have a national average recycled content of 34.2% (19.8% post-consumer and 14.4% pre-consumer). If seeking a higher number to meet Credit MR 5, please contact us at (info@clarkdietrich.com / 888-437-3244)

Project Information	Contractor Information	Architect Information
Name: Garrett College	Name: Leonard S. Fiore, Inc	Name:
Address:	Contact:	Contact:
	Phone:	Phone:
	Fax:	Fax:

CD-STRS © 07/20 ClarkDietrich Building Systems

Product Submittal Sheet

Technical Services: 888-437-3244
Engineering Services: 877-832-3206

Sales: 800-543-7140
clarkdietrich.com

Product category: S162 (1-5/8" Flange Structural Stud)
Product name: **600S162-54 (50ksi, CP60) P - Punched**
54mils (16ga)

Coating: CP60 per ASTM C955
Color coding: Green

05.40.00 (Cold-Formed Metal Framing)

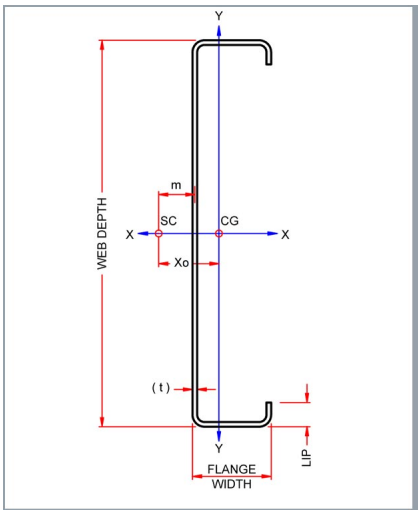

Geometric Properties

Web depth	6.000 in		
Flange width	1.625 in	Punchout width	1.50 in
Stiffening lip	0.500 in	Punchout length	4.00 in
Design thickness	0.0566 in	Min. steel thickness	0.0538 in
Yield strength, Fy	50 ksi	Fy with Cold-Work, Fya	55.3 ksi
Ultimate, Fu	65.0 ksi		

Gross Section Properties of Full Section, Strong Axis

Cross sectional area (A)	0.556 in^2
Member weight per foot of length	1.89 lb/ft
Moment of inertia (Ix)	2.861 in^4
Section modulus (Sx)	0.954 in^3
Radius of gyration (Rx)	2.268 in
Gross moment of inertia (Iy)	0.180 in^4
Gross radius of gyration (Ry)	0.570 in

Effective Section Properties, Strong Axis

Effective Area (Ae)	0.307 in^2
Moment of inertia for deflection (Ix)	2.860 in^4
Section modulus (Sx)	0.916 in^3
Allowable bending moment (Ma)	30.33 in-k
Allowable moment based on distortion buckling (Mad)	23.17 in-k
Allowable shear force in web (solid section)	2823 lb
Allowable shear force in web (perforated section)	1947 lb
Unbraced length (Lu)	31.4 in

Torsional Properties

St. Venant torsion constant (J x 1000)	0.594 in^4
Warping constant (Cw)	1.337 in^6
Distance from shear center to neutral axis (Xo)	-1.049 in
Distance between shear center and web centerline (m)	0.663 in
Radii of gyration (Ro)	2.563 in
Torsional flexural constant (Beta)	0.833

Used in framing applications:

- **Load-bearing walls**
- **Curtain walls**
- **Tall interior walls**
- **Floor & ceiling joists**
- **Trusses**

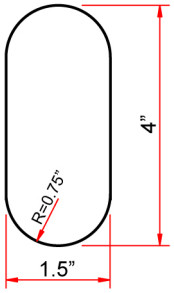

Structural Punchout

East market punchout spacing:
12" from lead end then 24" o.c.

West market punchout spacing:
24" from lead end then 24" o.c.

ASTM & Code Standards:

- AISI North American Specification [NASPEC] S100-16
- * Effective properties incorporate the strength increase from the cold work of forming
- Gross properties are based on the cross section away from the punchouts
- Structural framing is produced to meet or exceed ASTM C955
- Sheet steel meets or exceeds mechanical and chemical requirements of ASTM A1003
- ClarkDietrich's structural and nonstructural framing comply with the SFIA Code Compliance Certification Program, ICC-ES ESR-1166P and Intertek CCRR-0206
- For installation & storage information refer to ASTM C1007
- SDS & Product Certification Information is available at itools.clarkdietrich.com

Sustainability Credits:
For more details and LEED letters contact Technical Services at 888-437-3244 or visit www.clarkdietrich.com/LEED
LEED v4 MR Credit -- Building Product Disclosure and Optimization: EPD (1 point) - Sourcing of Raw Materials (1 point) - Material Ingredients (1 point) - Construction and Demolition Waste Management (up to 2 points) - Innovation Credit (up to 2 points).
LEED 2009 Credit MR 2 & MR 4 -- ClarkDietrich's steel products are 100% recyclable and have a national average recycled content of 34.2% (19.8% post-consumer and 14.4% pre-consumer). If seeking a higher number to meet Credit MR 5, please contact us at (info@clarkdietrich.com / 888-437-3244)

Project Information	Contractor Information	Architect Information
Name: Garrett College	Name: Leonard S. Fiore, Inc	Name:
Address:	Contact:	Contact:
	Phone:	Phone:
	Fax:	Fax:

CD-STRS © 07/20 ClarkDietrich Building Systems

Product Submittal Sheet

Technical Services: 888-437-3244
Engineering Services: 877-832-3206
Sales: 800-543-7140
clarkdietrich.com

Product category: S162 (1-5/8" Flange Structural Stud)
Product name: **250S162-43 (33ksi, CP60) P - Punched**
43mils (18ga)
Coating: CP60 per ASTM C955
Color coding: Yellow

05.40.00 (Cold-Formed Metal Framing)

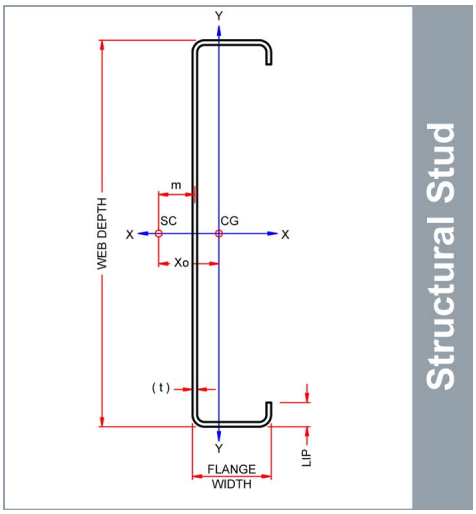

Geometric Properties

Web depth	2.500 in		
Flange width	1.625 in	Punchout width	0.75 in
Stiffening lip	0.500 in	Punchout length	4.00 in
Design thickness	0.0451 in	Min. steel thickness	0.0428 in
Yield strength, Fy	33 ksi	Fy with Cold-Work, Fya	36.3 ksi
Ultimate, Fu	45.0 ksi		

Gross Section Properties of Full Section, Strong Axis

Cross sectional area (A)	0.289 in^2
Member weight per foot of length	0.98 lb/ft
Moment of inertia (Ix)	0.302 in^4
Section modulus (Sx)	0.242 in^3
Radius of gyration (Rx)	1.022 in
Gross moment of inertia (Iy)	0.111 in^4
Gross radius of gyration (Ry)	0.620 in

Effective Section Properties, Strong Axis

Effective Area (Ae)	0.244 in^2
Moment of inertia for deflection (Ix)	0.302 in^4
Section modulus (Sx)	0.240 in^3
Allowable bending moment (Ma)	5.22 in-k
Allowable moment based on distortion buckling (Mad)	4.72 in-k
Allowable shear force in web (solid section)	1265 lb
Allowable shear force in web (perforated section)	394 lb
Unbraced length (Lu)	42.1 in

Torsional Properties

St. Venant torsion constant (J x 1000)	0.196 in^4
Warping constant (Cw)	0.184 in^6
Distance from shear center to neutral axis (Xo)	-1.457 in
Distance between shear center and web centerline (m)	0.852 in
Radii of gyration (Ro)	1.885 in
Torsional flexural constant (Beta)	0.402

Used in framing applications:

- **Load-bearing walls**
- **Curtain walls**
- **Tall interior walls**
- **Floor & ceiling joists**
- **Trusses**

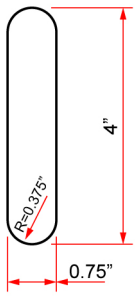

Structural Punchout

East market punchout spacing:
12" from lead end then 24" o.c.

West market punchout spacing:
24" from lead end then 24" o.c.

ASTM & Code Standards:

- AISI North American Specification [NASPEC] S100-16
- * Effective properties incorporate the strength increase from the cold work of forming
- Gross properties are based on the cross section away from the punchouts
- Structural framing is produced to meet or exceed ASTM C955
- Sheet steel meets or exceeds mechanical and chemical requirements of ASTM A1003
- ClarkDietrich's structural and nonstructural framing comply with the SFIA Code Compliance Certification Program, ICC-ES ESR-1166P and Intertek CCRR-0206
- For installation & storage information refer to ASTM C1007
- SDS & Product Certification Information is available at itools.clarkdietrich.com

Sustainability Credits:
For more details and LEED letters contact Technical Services at 888-437-3244 or visit www.clarkdietrich.com/LEED
LEED v4 MR Credit -- Building Product Disclosure and Optimization: EPD (1 point) - Sourcing of Raw Materials (1 point) - Material Ingredients (1 point) - Construction and Demolition Waste Management (up to 2 points) - Innovation Credit (up to 2 points).
LEED 2009 Credit MR 2 & MR 4 -- ClarkDietrich's steel products are 100% recyclable and have a national average recycled content of 34.2% (19.8% post-consumer and 14.4% pre-consumer). If seeking a higher number to meet Credit MR 5, please contact us at (info@clarkdietrich.com / 888-437-3244)

Project Information	Contractor Information	Architect Information
Name: Garrett College	Name: Leonard S. Fiore, Inc	Name:
Address:	Contact:	Contact:
	Phone:	Phone:
	Fax:	Fax:

CD-STRS © 07/20 ClarkDietrich Building Systems

Product Submittal Sheet

Technical Services: 888-437-3244
Engineering Services: 877-832-3206
Sales: 800-543-7140
clarkdietrich.com

Product category: T125 (1-1/4" Leg Structural Track)
Product name: **600T125-43 (33ksi, CP60) - Unpunched**
43mils (18ga)

Coating: CP60 per ASTM C955
Color coding: Yellow

05.40.00 (Cold-Formed Metal Framing)

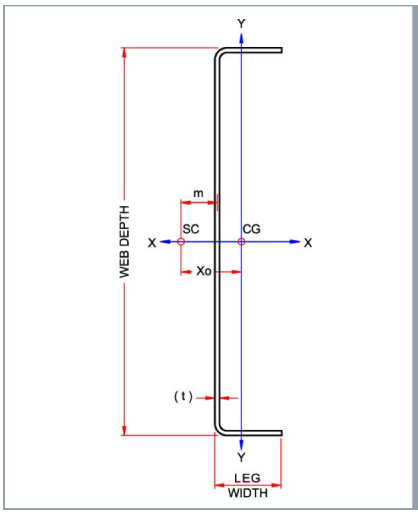

Structural Track

Geometric Properties

Web depth	6.161 in		
Leg width	1.25 in		
Design thickness	0.0451 in	Min. steel thickness	0.0428 in
Yield strength, Fy	33 ksi	*Fy with Cold-Work, Fya	33.0 ksi
Ultimate, Fu	45.0 ksi		

Gross Section Properties of Full Section, Strong Axis

Cross sectional area (A)	0.383 in^2
Member weight per foot of length	1.30 lb/ft
Moment of inertia (Ix)	1.862 in^4
Section modulus (Sx)	0.604 in^3
Radius of gyration (Rx)	2.205 in
Gross moment of inertia (Iy)	0.044 in^4
Gross radius of gyration (Ry)	0.337 in

Effective Section Properties, Strong Axis

Effective Area (Ae)	0.181 in^2
Moment of inertia for deflection (Ix)	1.768 in^4
Section modulus (Sx)	0.461 in^3
Allowable bending moment (Ma)	9.11 in-k
Allowable shear force in web	1377 lb

Torsional Properties

St. Venant torsion constant (J x 1000)	0.260 in^4
Warping constant (Cw)	0.307 in^6
Distance from shear center to neutral axis (Xo)	-0.513 in
Distance between shear center and web centerline (m)	0.335 in
Radii of gyration (Ro)	2.289 in
Torsional flexural constant (Beta)	0.950

Used in framing applications:

- **Load-bearing walls**
- **Curtain walls**
- **Tall interior walls**
- **Floor & ceiling joists**
- **Trusses**

ASTM & Code Standards:

- AISI North American Specification [NASPEC] S100-16
- * Effective properties incorporate the strength increase from the cold work of forming
- Gross properties are based on the cross section away from the punchouts
- Structural framing is produced to meet or exceed ASTM C955
- Sheet steel meets or exceeds mechanical and chemical requirements of ASTM A1003
- ClarkDietrich's structural and nonstructural framing comply with the SFIA Code Compliance Certification Program, ICC-ES ESR-1166P and Intertek CCRR-0206
- For installation & storage information refer to ASTM C1007
- SDS & Product Certification Information is available at itools.clarkdietrich.com

Sustainability Credits:
For more details and LEED letters contact Technical Services at 888-437-3244 or visit www.clarkdietrich.com/LEED
LEED v4 MR Credit -- Building Product Disclosure and Optimization: EPD (1 point) - Sourcing of Raw Materials (1 point) - Material Ingredients (1 point) - Construction and Demolition Waste Management (up to 2 points) - Innovation Credit (up to 2 points).
LEED 2009 Credit MR 2 & MR 4 -- ClarkDietrich's steel products are 100% recyclable and have a national average recycled content of 34.2% (19.8% post-consumer and 14.4% pre-consumer). If seeking a higher number to meet Credit MR 5, please contact us at (info@clarkdietrich.com / 888-437-3244)

Project Information	Contractor Information	Architect Information
Name: Garrett College	Name: Leonard S. Fiore, Inc	Name:
Address:	Contact:	Contact:
	Phone:	Phone:
	Fax:	Fax:

CD-STRT © 07/20 ClarkDietrich Building Systems

Product Submittal Sheet

Technical Services: 888-437-3244
Engineering Services: 877-832-3206
Sales: 800-543-7140
clarkdietrich.com

Product category: T125 (1-1/4" Leg Structural Track)
Product name: **600T125-54 (50ksi, CP60) - Unpunched**
54mils (16ga)

Coating: CP60 per ASTM C955
Color coding: Green

05.40.00 (Cold-Formed Metal Framing)

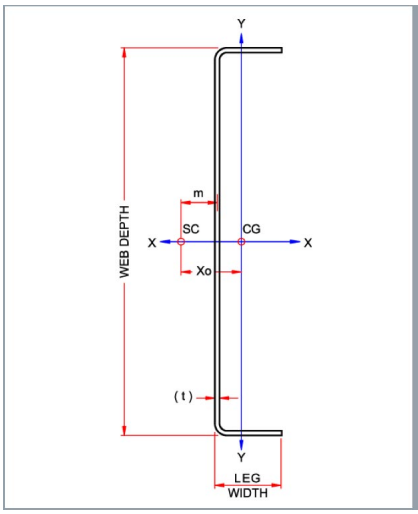

Structural Track

Geometric Properties

Web depth	6.198 in		
Leg width	1.25 in		
Design thickness	0.0566 in	Min. steel thickness	0.0538 in
Yield strength, Fy	50 ksi	*Fy with Cold-Work, Fya	50.0 ksi
Ultimate, Fu	65.0 ksi		

Gross Section Properties of Full Section, Strong Axis

Cross sectional area (A)	0.480 in^2
Member weight per foot of length	1.63 lb/ft
Moment of inertia (Ix)	2.345 in^4
Section modulus (Sx)	0.757 in^3
Radius of gyration (Rx)	2.209 in
Gross moment of inertia (Iy)	0.054 in^4
Gross radius of gyration (Ry)	0.335 in

Effective Section Properties, Strong Axis

Effective Area (Ae)	0.234 in^2
Moment of inertia for deflection (Ix)	2.241 in^4
Section modulus (Sx)	0.592 in^3
Allowable bending moment (Ma)	17.74 in-k
Allowable shear force in web	2728 lb

Torsional Properties

St. Venant torsion constant (J x 1000)	0.513 in^4
Warping constant (Cw)	0.384 in^6
Distance from shear center to neutral axis (Xo)	-0.508 in
Distance between shear center and web centerline (m)	0.332 in
Radii of gyration (Ro)	2.292 in
Torsional flexural constant (Beta)	0.951

Used in framing applications:

- **Load-bearing walls**
- **Curtain walls**
- **Tall interior walls**
- **Floor & ceiling joists**
- **Trusses**

ASTM & Code Standards:

- AISI North American Specification [NASPEC] S100-16
- * Effective properties incorporate the strength increase from the cold work of forming
- Gross properties are based on the cross section away from the punchouts
- Structural framing is produced to meet or exceed ASTM C955
- Sheet steel meets or exceeds mechanical and chemical requirements of ASTM A1003
- ClarkDietrich's structural and nonstructural framing comply with the SFIA Code Compliance Certification Program, ICC-ES ESR-1166P and Intertek CCRR-0206
- For installation & storage information refer to ASTM C1007
- SDS & Product Certification Information is available at itools.clarkdietrich.com

Sustainability Credits:
For more details and LEED letters contact Technical Services at 888-437-3244 or visit www.clarkdietrich.com/LEED
LEED v4 MR Credit -- Building Product Disclosure and Optimization: EPD (1 point) - Sourcing of Raw Materials (1 point) - Material Ingredients (1 point) - Construction and Demolition Waste Management (up to 2 points) - Innovation Credit (up to 2 points).
LEED 2009 Credit MR 2 & MR 4 -- ClarkDietrich's steel products are 100% recyclable and have a national average recycled content of 34.2% (19.8% post-consumer and 14.4% pre-consumer). If seeking a higher number to meet Credit MR 5, please contact us at (info@clarkdietrich.com / 888-437-3244)

Project Information	Contractor Information	Architect Information
Name: Garrett College	Name: Leonard S. Fiore, Inc	Name:
Address:	Contact:	Contact:
	Phone:	Phone:
	Fax:	Fax:

CD-STRT © 07/20 ClarkDietrich Building Systems

Product Submittal Sheet

Technical Services: 888-437-3244
Engineering Services: 877-832-3206
Sales: 800-543-7140
clarkdietrich.com

05.40.00 (Cold-Formed Metal Framing)

Product category: T200 (2" Leg Structural Track)
Product name: **600T200-54 (50ksi, CP60) - Unpunched**
54mils (16ga)

Coating: CP60 per ASTM C955
Color coding: Green

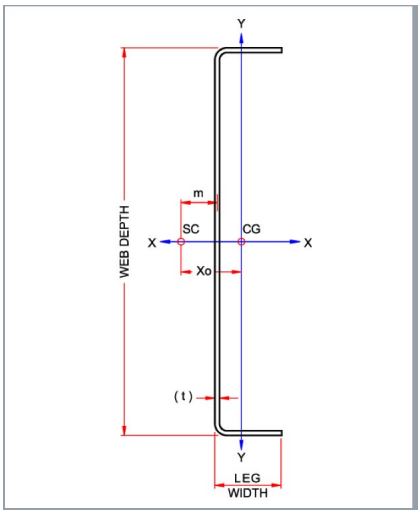

Structural Track

Geometric Properties

Web depth	6.198 in		
Leg width	2 in		
Design thickness	0.0566 in	Min. steel thickness	0.0538 in
Yield strength, Fy	50 ksi	*Fy with Cold-Work, Fya	50.0 ksi
Ultimate, Fu	65.0 ksi		

Gross Section Properties of Full Section, Strong Axis

Cross sectional area (A)	0.565 in^2
Member weight per foot of length	1.92 lb/ft
Moment of inertia (Ix)	3.146 in^4
Section modulus (Sx)	1.015 in^3
Radius of gyration (Rx)	2.359 in
Gross moment of inertia (Iy)	0.203 in^4
Gross radius of gyration (Ry)	0.600 in

Effective Section Properties, Strong Axis

Effective Area (Ae)	0.241 in^2
Moment of inertia for deflection (Ix)	2.641 in^4
Section modulus (Sx)	0.717 in^3
Allowable bending moment (Ma)	21.48 in-k
Allowable shear force in web	2728 lb

Torsional Properties

St. Venant torsion constant (J x 1000)	0.604 in^4
Warping constant (Cw)	1.381 in^6
Distance from shear center to neutral axis (Xo)	-1.038 in
Distance between shear center and web centerline (m)	0.649 in
Radii of gyration (Ro)	2.646 in
Torsional flexural constant (Beta)	0.846

Used in framing applications:

- **Load-bearing walls**
- **Curtain walls**
- **Tall interior walls**
- **Floor & ceiling joists**
- **Trusses**

ASTM & Code Standards:

- AISI North American Specification [NASPEC] S100-16
- * Effective properties incorporate the strength increase from the cold work of forming
- Gross properties are based on the cross section away from the punchouts
- Structural framing is produced to meet or exceed ASTM C955
- Sheet steel meets or exceeds mechanical and chemical requirements of ASTM A1003
- ClarkDietrich's structural and nonstructural framing comply with the SFIA Code Compliance Certification Program, ICC-ES ESR-1166P and Intertek CCRR-0206
- For installation & storage information refer to ASTM C1007
- SDS & Product Certification Information is available at itools.clarkdietrich.com

Sustainability Credits:
For more details and LEED letters contact Technical Services at 888-437-3244 or visit www.clarkdietrich.com/LEED
LEED v4 MR Credit -- Building Product Disclosure and Optimization: EPD (1 point) - Sourcing of Raw Materials (1 point) - Material Ingredients (1 point) - Construction and Demolition Waste Management (up to 2 points) - Innovation Credit (up to 2 points).
LEED 2009 Credit MR 2 & MR 4 -- ClarkDietrich's steel products are 100% recyclable and have a national average recycled content of 34.2% (19.8% post-consumer and 14.4% pre-consumer). If seeking a higher number to meet Credit MR 5, please contact us at (info@clarkdietrich.com / 888-437-3244)

Project Information	Contractor Information	Architect Information
Name: Garrett College	Name: Leonard S. Fiore, Inc	Name:
Address:	Contact:	Contact:
	Phone:	Phone:
	Fax:	Fax:

CD-STRT © 07/20 ClarkDietrich Building Systems

Product Submittal Sheet

Technical Services: 888-437-3244
Engineering Services: 877-832-3206
Sales: 800-543-7140
clarkdietrich.com

MaxTrak® (SLT) 3" Leg

Slotted Deflection Track for structural wall framing

05.40.00 (Cold-Formed Metal Framing)

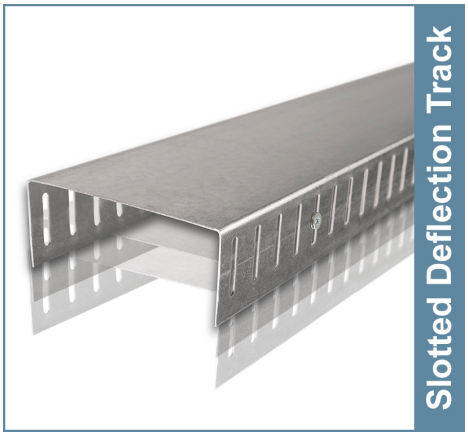

The MaxTrak (SLT) system is a head-of-wall deflection track that is used for framing exterior curtain walls and non-load bearing interior walls. This system allows for vertical live load movement of the primary structure without transferring axial loads to the wall studs.

The MaxTrak system is attached to the wall studs through vertical slots using waferhead screws creating a positive connection that allows for vertical movement and also eliminates the requirement for lateral bracing near the top of the wall stud. The slots in the track's 3" legs are designed for a total allowable vertical movement of 2" (1" +/-). The MaxTrak system must be designed to take the end reaction of the wall studs (point loads) by using the allowable loads below.

- Allows up to 2" (1" +/-) vertical deflection
- UL tested 1 & 2 hour systems
- Guideline at center of vertical slots

Product Data & Ordering Information:

Material: Yield Strength: Grade 33ksi for 33mils & 43mils
Yield Strength: Grade 50ksi for 54mils & 68mils
Coating: CP60 per ASTM C955 (G90 available)
33mils: 20ga STR, 0.0346" Design Thickness, 0.0329" Min. Thickness
43mils: 18ga, 0.0451" Design Thickness, 0.0428" Min. Thickness
54mils: 16ga, 0.0566" Design Thickness, 0.0538" Min. Thickness
68mils: 14ga, 0.0713" Design Thickness, 0.0677" Min. Thickness

Dimensions: 3" legs with an inside depth equal to the depth of the stud
Available in 2-1/2", 3-5/8", 4", 6" and 8" wide systems
Vertical slots are 0.22" wide x 2" long and spaced every 1" o.c.
Track length = 10'-0"

ASTM & Code Standards:

- ASTM A1003, C645, C754, C955, C1002, C1007, E119, E814 and E1966.
- ANSI / UL 2079 and MaxTrak UL tested systems (See UL Fire Resistance Directory 42XE)
- SDS & Product Certification Information is available at www.clarkdietrich.com/SupportDocs

MaxTrak 3" Leg Allowable Lateral Loads:

Stud Thickness	33mil (20ga) MaxTrak	43mil (18ga) MaxTrak	54mil (16ga) MaxTrak	68mil (14ga) MaxTrak
33mil (20ga)	99 lbs	147 lbs	187 lbs	187 lbs
43mil (18ga)	121 lbs	175 lbs	226 lbs	244 lbs
54mil (16ga)	192 lbs	230 lbs	286 lbs	367 lbs
68mil (14ga)	256 lbs	256 lbs	330 lbs	444 lbs
97mil (12ga)	256 lbs	256 lbs	368 lbs	487 lbs

- #10 x 9/16" wafer head screws shall be used for the stud-to-track connection.
- Screws should be placed a minimum of 3/8" from the end of the stud.
- Allowable loads are also applicable for single stud located at minimum 6" from the end of the MaxTRAK.
- Provide a gap of 1-1/8" between end of stud and inside face of track web for screws placed at mid-length of slotted openings.

Calculating slip track point load:
Point Load (P) =
(wind pressure PSF) x (spacing FT) x (wall stud length FT) / 2

Example 1: (5 PSF) x (1.33 FT) x (9.5 FT) / 2 = 31.7 lbs.

Sustainability Credits:
For more details and LEED letters contact Technical Services at 888-437-3244 or visit www.clarkdietrich.com/LEED
LEED v4 MR Credit -- Building Product Disclosure and Optimization: EPD (1 point) - Sourcing of Raw Materials (1 point) - Material Ingredients (1 point) - Construction and Demolition Waste Management (up to 2 points) - Innovation Credit (up to 2 points).
LEED 2009 Credit MR 2 & MR 4 -- ClarkDietrich's steel products are 100% recyclable and have a national average recycled content of 34.2% (19.8% post-consumer and 14.4% pre-consumer). If seeking a higher number to meet Credit MR 5, please contact us at (info@clarkdietrich.com / 888-437-3244)

Project Information	Contractor Information	Architect Information
Name: Garrett College	Name: Leonard S. Fiore, Inc	Name:
Address:	Contact:	Contact:
	Phone:	Phone:
	Fax:	Fax:

SLT300-STR © 11/2020 ClarkDietrich Building Systems

Product Submittal Sheet

Technical Services: 888-437-3244
Engineering Services: 877-832-3206
Sales: 800-543-7140
clarkdietrich.com

X973 EasyClip™ X-Series™

12 Gauge (97mil) Clip Angle

05.40.00 (Cold-Formed Metal Framing)

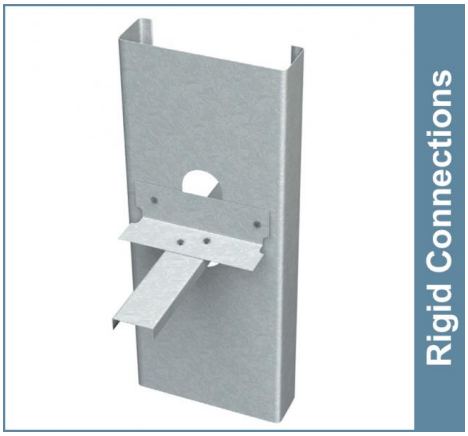

ClarkDietrich EasyClip X-Series clip angles are used to secure U-channel to wall studs for lateral bridging. U-Channel is passed through the stud knockout and an EasyClip X-Series clip is screw attached or welded to provide a rigid connection. X-Series clip angles and U-channel should not be used in lateral bridging when stud width exceeds 8".

For typical construction details using this clip, reference the Clip & Connector Catalog or www.clarkdietrich.com for more information.

Product Data & Ordering Information:

Material:	Structural Grade 50 Type H (ST50H), 50ksi (340 MPa)
Coating:	G90 (Z275) hot-dipped galvanized coating
Thickness:	12 Gauge (97mil)
	0.1017" Design thickness
	0.9666" Minimum thickness
Dimensions:	2" x 2" x 3-3/8" (50.8mm x 50.8mm x 85.7mm)
Packaging:	100 pieces per bucket
Product Weight:	0.38 lb / piece

ASTM & Code Standards:

- Sheet steel meets or exceeds requirements of ASTM A1003
- Galvanized coating meets or exceeds requirements of ASTM A653
- SDS & Product Certification Information available at www.clarkdietrich.com/SupportDocs

Alternative Products:

- SwiftClip™ LS-Series Clip
- EasyClip™ U or S-Series™ Clip Angle
- Spazzer® 5400 and Spazzer® 9200

- 2" x 2" legs
- Available lengths: 3-3/8", 5-3/4", 7-3/4" & 9-3/4"
- Available in 16, 14 & 12 gauge
- Pre-punched for faster and more accurate fastener attachment

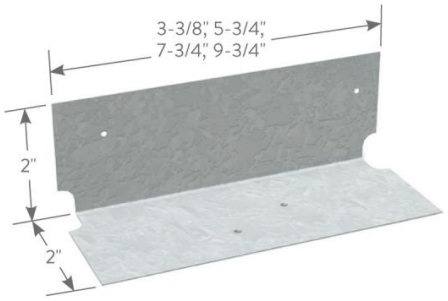

Sustainability Credits:

For more details and LEED letters contact Technical Services at 888-437-3244 or visit www.clarkdietrich.com/LEED

LEED v4 MR Credit -- Building Product Disclosure and Optimization: EPD (1 point) - Sourcing of Raw Materials (1 point) - Material Ingredients (1 point) - Construction and Demolition Waste Management (up to 2 points) - Innovation Credit (up to 2 points).

LEED 2009 Credit MR 2 & MR 4 -- ClarkDietrich's steel products are 100% recyclable and have a national average recycled content of 34.2% (19.8% post-consumer and 14.4% pre-consumer). If seeking a higher number to meet Credit MR 5, please contact us at (info@clarkdietrich.com / 888-437-3244)

Project Information	Contractor Information	Architect Information
Name: Garrett College	Name: Leonard S. Fiore, Inc	Name:
Address:	Contact:	Contact:
	Phone:	Phone:
	Fax:	Fax:

EasyClip X-Series Clip Angles © 02/2019 ClarkDietrich Building Systems

Product Submittal Sheet

Technical Services: 888-437-3244
Engineering Services: 877-832-3206
Sales: 800-543-7140
clarkdietrich.com

X545 EasyClip™ X-Series™

16 Gauge (54mil) Clip Angle

05.40.00 (Cold-Formed Metal Framing)

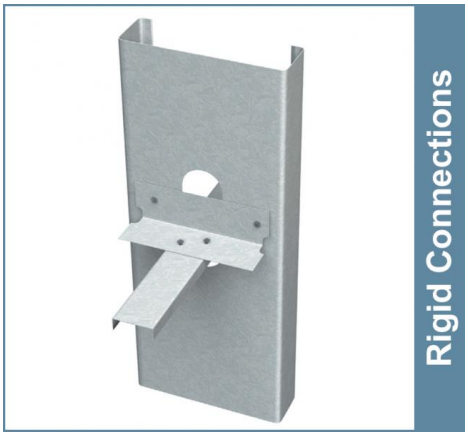

ClarkDietrich EasyClip X-Series clip angles are used to secure U-channel to wall studs for lateral bridging. U-Channel is passed through the stud knockout and an EasyClip X-Series clip is screw attached or welded to provide a rigid connection. X-Series clip angles and U-channel should not be used in lateral bridging when stud width exceeds 8".

For typical construction details using this clip, reference the Clip & Connector Catalog or www.clarkdietrich.com for more information.

Product Data & Ordering Information:

Material:	Structural Grade 50 Type H (ST50H), 50ksi (340 MPa)
Coating:	G90 (Z275) hot-dipped galvanized coating
Thickness:	16 Gauge (54mil)
	0.0566" Design thickness
	0.0538" Minimum thickness
Dimensions:	2" x 2" x 5-3/4" (50.8mm x 50.8mm x 146mm)
Packaging:	170 pieces per bucket
Product Weight:	0.37 lb / piece

ASTM & Code Standards:

- Sheet steel meets or exceeds requirements of ASTM A1003
- Galvanized coating meets or exceeds requirements of ASTM A653
- SDS & Product Certification Information available at www.clarkdietrich.com/SupportDocs

Alternative Products:

- SwiftClip™ LS-Series Clip
- EasyClip™ U or S-Series™ Clip Angle
- Spazzer® 5400 and Spazzer® 9200

- 2" x 2" legs
- Available lengths: 3-3/8", 5-3/4", 7-3/4" & 9-3/4"
- Available in 16, 14 & 12 gauge
- Pre-punched for faster and more accurate fastener attachment

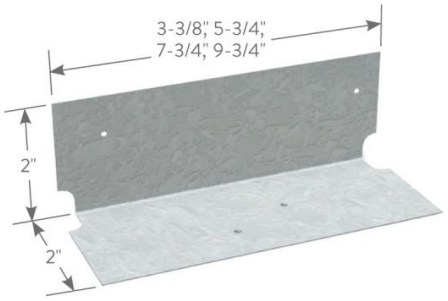

Sustainability Credits:

For more details and LEED letters contact Technical Services at 888-437-3244 or visit www.clarkdietrich.com/LEED

LEED v4 MR Credit -- Building Product Disclosure and Optimization: EPD (1 point) - Sourcing of Raw Materials (1 point) - Material Ingredients (1 point) - Construction and Demolition Waste Management (up to 2 points) - Innovation Credit (up to 2 points).

LEED 2009 Credit MR 2 & MR 4 -- ClarkDietrich's steel products are 100% recyclable and have a national average recycled content of 34.2% (19.8% post-consumer and 14.4% pre-consumer). If seeking a higher number to meet Credit MR 5, please contact us at (info@clarkdietrich.com / 888-437-3244)

Project Information	Contractor Information	Architect Information
Name: Garrett College	Name: Leonard S. Fiore, Inc	Name:
Address:	Contact:	Contact:
	Phone:	Phone:
	Fax:	Fax:

EasyClip X-Series Clip Angles © 02/2019 ClarkDietrich Building Systems

Product Submittal Sheet

Technical Services: 888-437-3244
Engineering Services: 877-832-3206
Sales: 800-543-7140
clarkdietrich.com

X685 EasyClip™ X-Series™

14 Gauge (68mil) Clip Angle

05.40.00 (Cold-Formed Metal Framing)

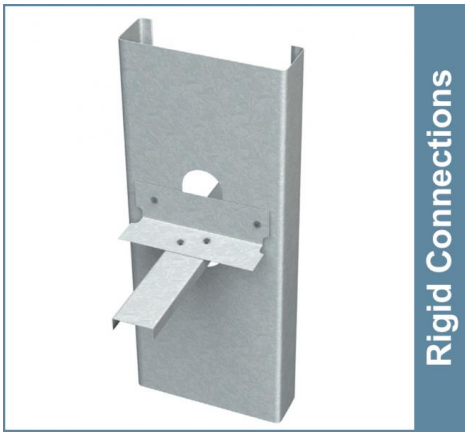

ClarkDietrich EasyClip X-Series clip angles are used to secure U-channel to wall studs for lateral bridging. U-Channel is passed through the stud knockout and an EasyClip X-Series clip is screw attached or welded to provide a rigid connection. X-Series clip angles and U-channel should not be used in lateral bridging when stud width exceeds 8".

For typical construction details using this clip, reference the Clip & Connector Catalog or www.clarkdietrich.com for more information.

Product Data & Ordering Information:

Material:	Structural Grade 50 Type H (ST50H), 50ksi (340 MPa)
Coating:	G90 (Z275) hot-dipped galvanized coating
Thickness:	14 Gauge (68mil)
	0.0713" Design thickness
	0.0677" Minimum thickness
Dimensions:	2" x 2" x 5-3/4" (50.8mm x 50.8mm x 146mm)
Packaging:	100 pieces per bucket
Product Weight:	0.46 lb / piece

ASTM & Code Standards:

- Sheet steel meets or exceeds requirements of ASTM A1003
- Galvanized coating meets or exceeds requirements of ASTM A653
- SDS & Product Certification Information available at www.clarkdietrich.com/SupportDocs

Alternative Products:

- SwiftClip™ LS-Series Clip
- EasyClip™ U or S-Series™ Clip Angle
- Spazzer® 5400 and Spazzer® 9200

- 2" x 2" legs
- Available lengths: 3-3/8", 5-3/4", 7-3/4" & 9-3/4"
- Available in 16, 14 & 12 gauge
- Pre-punched for faster and more accurate fastener attachment

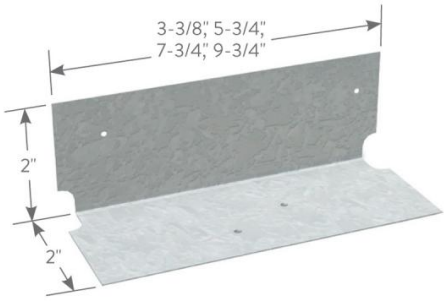

Sustainability Credits:

For more details and LEED letters contact Technical Services at 888-437-3244 or visit www.clarkdietrich.com/LEED

LEED v4 MR Credit -- Building Product Disclosure and Optimization: EPD (1 point) - Sourcing of Raw Materials (1 point) - Material Ingredients (1 point) - Construction and Demolition Waste Management (up to 2 points) - Innovation Credit (up to 2 points).

LEED 2009 Credit MR 2 & MR 4 -- ClarkDietrich's steel products are 100% recyclable and have a national average recycled content of 34.2% (19.8% post-consumer and 14.4% pre-consumer). If seeking a higher number to meet Credit MR 5, please contact us at (info@clarkdietrich.com / 888-437-3244)

Project Information	Contractor Information	Architect Information
Name: Garrett College	Name: Leonard S. Fiore, Inc	Name:
Address:	Contact:	Contact:
	Phone:	Phone:
	Fax:	Fax:

EasyClip X-Series Clip Angles © 02/2019 ClarkDietrich Building Systems

Product Submittal Sheet

Technical Services: 888-437-3244
Engineering Services: 877-832-3206
Sales: 800-543-7140
clarkdietrich.com

X975 EasyClip™ X-Series™

12 Gauge (97mil) Clip Angle

05.40.00 (Cold-Formed Metal Framing)

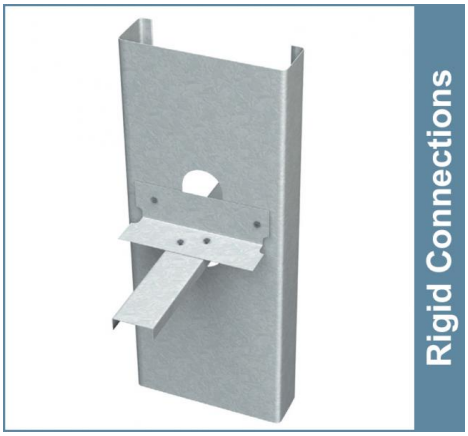

ClarkDietrich EasyClip X-Series clip angles are used to secure U-channel to wall studs for lateral bridging. U-Channel is passed through the stud knockout and an EasyClip X-Series clip is screw attached or welded to provide a rigid connection. X-Series clip angles and U-channel should not be used in lateral bridging when stud width exceeds 8".

For typical construction details using this clip, reference the Clip & Connector Catalog or www.clarkdietrich.com for more information.

Product Data & Ordering Information:

Material:	Structural Grade 50 Type H (ST50H), 50ksi (340 MPa)
Coating:	G90 (Z275) hot-dipped galvanized coating
Thickness:	12 Gauge (97mil)
	0.1017" Design thickness
	0.0966" Minimum thickness
Dimensions:	2" x 2" x 5-3/4" (50.8mm x 50.8mm x 146mm)
Packaging:	100 pieces per bucket
Product Weight:	0.65 lb / piece

ASTM & Code Standards:

- Sheet steel meets or exceeds requirements of ASTM A1003
- Galvanized coating meets or exceeds requirements of ASTM A653
- SDS & Product Certification Information available at www.clarkdietrich.com/SupportDocs

Alternative Products:

- SwiftClip™ LS-Series Clip
- EasyClip™ U or S-Series™ Clip Angle
- Spazzer® 5400 and Spazzer® 9200

- 2" x 2" legs
- Available lengths: 3-3/8", 5-3/4", 7-3/4" & 9-3/4"
- Available in 16, 14 & 12 gauge
- Pre-punched for faster and more accurate fastener attachment

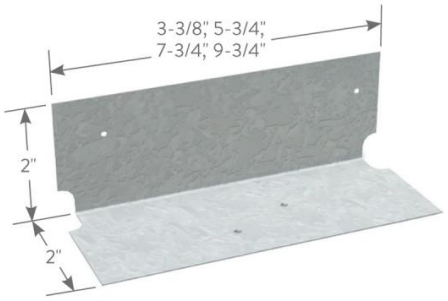

Sustainability Credits:

For more details and LEED letters contact Technical Services at 888-437-3244 or visit www.clarkdietrich.com/LEED

LEED v4 MR Credit -- Building Product Disclosure and Optimization: EPD (1 point) - Sourcing of Raw Materials (1 point) - Material Ingredients (1 point) - Construction and Demolition Waste Management (up to 2 points) - Innovation Credit (up to 2 points).

LEED 2009 Credit MR 2 & MR 4 -- ClarkDietrich's steel products are 100% recyclable and have a national average recycled content of 34.2% (19.8% post-consumer and 14.4% pre-consumer). If seeking a higher number to meet Credit MR 5, please contact us at (info@clarkdietrich.com / 888-437-3244)

Project Information	Contractor Information	Architect Information
Name: Garrett College	Name: Leonard S. Fiore, Inc	Name:
Address:	Contact:	Contact:
	Phone:	Phone:
	Fax:	Fax:

EasyClip X-Series Clip Angles © 02/2019 ClarkDietrich Building Systems

Product Submittal Sheet

Technical Services: 888-437-3244
Engineering Services: 877-832-3206
Sales: 800-543-7140
clarkdietrich.com

E685 EasyClip™ E-Series™

14 Gauge (68mil) Support Clip

05.40.00 (Cold-Formed Metal Framing)

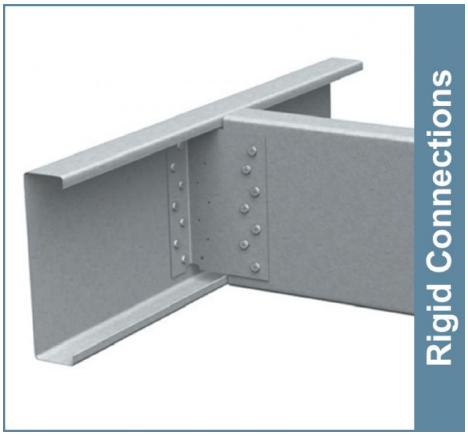

ClarkDietrich EasyClip E-Series support clips are primarily used for rigid stand-off connections. The 4" wide leg provides extra length to achieve stand-off connections up to 3". The EasyClip E-Series support clips are also commonly used in bypass wall conditions, a variety of floor framing applications including solid and ladder blocking attachments and joist-to-joist connections, and to secure rafter framing to the primary structure. Available in a variety of lengths and gauges, these clips are prepunched for faster and more accurate fastener placement.

For allowable loads for multiple connection options, reference the Clip & Connector Catalog or www.clarkdietrich.com for more information.

Product Data & Ordering Information:

Material:	Structural Grade 50 Type H (ST50H), 50ksi (340 MPa)
Coating:	G90 (Z275) hot-dipped galvanized coating
Thickness:	14 Gauge (68mil)
	0.0713" Design thickness
	0.0677" Minimum thickness
Dimensions:	4" x 1-1/2" x 5" (102mm x 38.1mm x 127mm)
Packaging:	100 pieces per bucket
Product Weight:	0.55 lb / piece

- 4" leg for large standoff
- Available lengths: 3", 5", 7", 9" & 11"
- Available in 16, 14 & 12 gauge
- Pre-punched for faster and more accurate fastener attachment

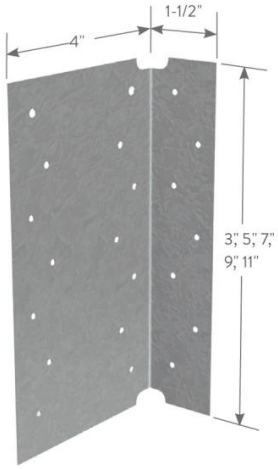

ASTM & Code Standards:

- Sheet steel meets or exceeds requirements of ASTM A1003
- Galvanized coating meets or exceeds requirements of ASTM A653
- SDS & Product Certification Information available at www.clarkdietrich.com/SupportDocs

Alternative Products:

- UniClip™, EasyClip™ D-Series™ Anchor Clip
- EasyClip™ T-Series™ Tall Anchor Angle
- EasyClip™ E-Series™ Support Clip

Sustainability Credits:

For more details and LEED letters contact Technical Services at 888-437-3244 or visit www.clarkdietrich.com/LEED

LEED v4 MR Credit -- Building Product Disclosure and Optimization: EPD (1 point) - Sourcing of Raw Materials (1 point) - Material Ingredients (1 point) - Construction and Demolition Waste Management (up to 2 points) - Innovation Credit (up to 2 points).

LEED 2009 Credit MR 2 & MR 4 -- ClarkDietrich's steel products are 100% recyclable and have a national average recycled content of 34.2% (19.8% post-consumer and 14.4% pre-consumer). If seeking a higher number to meet Credit MR 5, please contact us at (info@clarkdietrich.com / 888-437-3244)

Project Information	Contractor Information	Architect Information
Name: Garrett College	Name: Leonard S. Fiore, Inc	Name:
Address:	Contact:	Contact:
	Phone:	Phone:
	Fax:	Fax:

EasyClip E-Series Support Clip © 03/2019 ClarkDietrich Building Systems

Product Submittal Sheet

Technical Services: 888-437-3244
Engineering Services: 877-832-3206
Sales: 800-543-7140
clarkdietrich.com

EXTENDED FastClip™ 12" Slide Clip

(FCEC) 14 Gauge 12" long vertical slide deflection clip

05.40.00 (Cold-Formed Metal Framing)

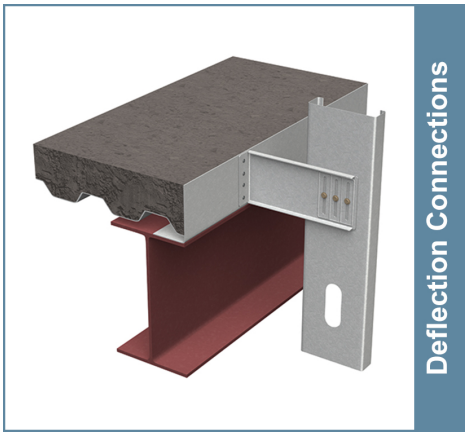

ClarkDietrich EXTENDED FastClip™ Slide Clip deflection clips are used to attach exterior curtainwall studs to the building structure and provide for vertical building movement independent of the cold-formed steel framing. The clips are available in standard lengths of 6", 8", 10", and 12" and are ideal for medium to larger standoff conditions. EXTENDED FastClip™ deflection clips install quickly with screws, welds, or powder-actuated fasteners, and provide adjustable standoff to ensure a plumb wall plane. FastClip™ Deflection Screws are provided with each clip to ensure friction-free sliding.

For allowable loads for multiple connection options, reference the Clip & Connector Catalog or www.clarkdietrich.com for more information.

Product Data & Ordering Information:

Material	Structural Grade 50 Type H (ST50H), 50ksi (340 MPa)
Dimensions	1-7/8" x 12" x 4-3/4" (47.6mm x 304.8mm x 120.6mm)
Thickness	14ga (68mil), 0.0713" Design thickness, 0.0677" Min. thickness
Coating	G90 (Z275) hot-dipped galvanized coating
Product weight	1.639 lb/piece
Packaging	25 pieces per bucket. Includes 80 FastClip deflection screws per box.

ASTM & Code Standards:

- Sheet steel meets or exceeds requirements of ASTM A1003
- Galvanized coating meets or exceeds requirements of ASTM A653
- Meets Intertek CCRR-0208 in compliance with the 2018, 2015 & 2012 International Building Code® (IBC) and International Residential Code® (IRC), as well as the 2017 Florida Building Code and 2016 California Building Code.
- Complies with the SFIA Manufacturing Compliance Certification Program for Connectors
- SDS & Product Certification Information available at www.clarkdietrich.com/SupportDocs

Alternative Products:

- Fast Clip™ Slide Clip, Fast Strut™

- Vertical movement up to 3" (1-1/2" up and 1-1/2" down).
- Use for all medium and large standoff conditions.
- FastClip™ Deflection Screws (included) provide frictionless slip connection.
- Custom and longer lengths available.
- U.S. Patent No. 6,688,069

FastClip™ Deflection Screw

Sustainability Credits:

For more details and LEED letters contact Technical Services at 888-437-3244 or visit www.clarkdietrich.com/LEED

LEED v4 MR Credit -- Building Product Disclosure and Optimization: EPD (1 point) - Sourcing of Raw Materials (1 point) - Material Ingredients (1 point) - Construction and Demolition Waste Management (up to 2 points) - Innovation Credit (up to 2 points).

LEED 2009 Credit MR 2 & MR 4 -- ClarkDietrich's steel products are 100% recyclable and have a national average recycled content of 34.2% (19.8% post-consumer and 14.4% pre-consumer). If seeking a higher number to meet Credit MR 5, please contact us at (info@clarkdietrich.com / 888-437-3244)

Project Information	Contractor Information	Architect Information
Name: Garrett College	Name: Leonard S. Fiore, Inc	Name:
Address:	Contact:	Contact:
	Phone:	Phone:
	Fax:	Fax:

FCEC12 © 10/2018 ClarkDietrich Building Systems

Product Submittal Sheet

Technical Services: 888-437-3244
Engineering Services: 877-832-3206
Sales: 800-543-7140
clarkdietrich.com

(FTC5) Fast Top™ Clips 4-3/4"

14 Gauge 4-3/4" wide vertical deflection clip

05.40.00 (Cold-Formed Metal Framing)

ClarkDietrich Fast Top™ Clips are used in head-of-wall deflection conditions for in-fill curtain wall assemblies to provide for vertical movement. These clips are used in place of or in combination with deflection track. They provide a positive attachment and do not require bridging installed continuously throughout the upper most punchouts.

The Fast Top™ clip can be attached to the underside of structural members, concrete decks or floor assemblies. Studs must be cut less than full height to enable vertical movement up to 2-1/2" (1-1/4" up and down). Fast Top™ Clips install quickly with welds, screws, or powder actuated fasteners. FastClip™ deflection screws are used to attach the clip to the cold-formed framing and to ensure frictionless deflection. These clips are also embossed with fastening patterns to ensure accurate placement of fasteners.

For allowable loads for multiple connection options, reference the Clip & Connector Catalog or www.clarkdietrich.com for more information.

- Vertical movement up to 2-1/2" (1-1/4" up and 1-1/4" down).
- Available in 3-1/4" and 4-3/4" widths.
- FastClip™ Deflection Screws (included) provide frictionless slip connection.
- U.S. Patent No. 6,688,069

Product Data & Ordering Information:

Material	Mill-certified SS Grade 50ksi (340 MPa)
Dimensions	1-1/2" x 4" x 4-3/4" (38.1mm x 102mm x 120mm)
Thickness	14ga (68mil), 0.0713" Design thickness, 0.0677" Min. thickness
Coating	G90 (Z275) hot-dipped galvanized coating
Product weight	0.610 lb/piece
Packaging	30 pieces per box. Includes 110 FastClip deflection screws per box.

ASTM & Code Standards:

- Galvanized sheet steel meets or exceeds requirements of ASTM A1003
- SDS & Product Certification Information available at www.clarkdietrich.com/SupportDocs

Alternative Products:

- MaxTrak® Slotted Deflection Track Systems

FastClip™ Deflection Screw

Sustainability Credits:

For more details and LEED letters contact Technical Services at 888-437-3244 or visit www.clarkdietrich.com/LEED

LEED v4 MR Credit -- Building Product Disclosure and Optimization: EPD (1 point) - Sourcing of Raw Materials (1 point) - Material Ingredients (1 point) - Construction and Demolition Waste Management (up to 2 points) - Innovation Credit (up to 2 points).

LEED 2009 Credit MR 2 & MR 4 -- ClarkDietrich's steel products are 100% recyclable and have a national average recycled content of 34.2% (19.8% post-consumer and 14.4% pre-consumer). If seeking a higher number to meet Credit MR 5, please contact us at (info@clarkdietrich.com / 888-437-3244)

Project Information	Contractor Information	Architect Information
Name: Garrett College	Name: Leonard S. Fiore, Inc	Name:
Address:	Contact:	Contact:
	Phone:	Phone:
	Fax:	Fax:

FTC5 © 09/2020 ClarkDietrich Building Systems

ClarkDietrich® PRODUCT INFORMATION

Example: 362S162-43 (33ksi, CP60) punched

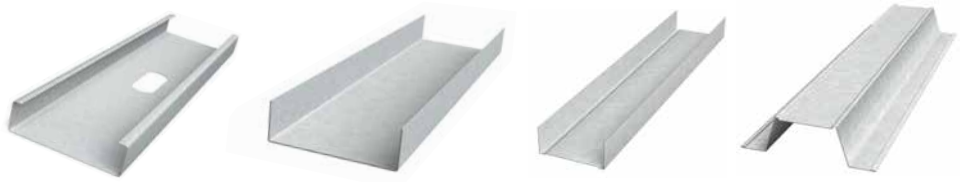

S = Structural stud or joist
PDS = ProSTUD® drywall stud

T = Structural track
PDT = ProTRAK® drywall track

U = CRC or U-channel

F = Furring channel

362 S 162 – 43 (33ksi, CP60) Punched

Punching
Punched studs or joists will be supplied unless the customer indicates unpunched material is required at time of order. All track and channels are unpunched.

Protective Coating
Structural framing CP60 (G90 available)
Drywall framing G40EQ (G40 or G60 available)

KSI -Yield Strength (Fy)
Structural: 33ksi or 50ksi steel
Drywall: See ProSTUD below.

ClarkDietrich structural member depths, flanges & available thickness

Member depths	Flange widths range	Mils range	Gauge range
(250) 2-1/2"	1-3/8," 1-5/8," 2" & 2-1/2"	33–68	20–14 ga
(350) 3-1/2"	1-3/8," 1-5/8," 2" & 2-1/2"	33–68	20–14 ga
(362) 3-5/8"	1-3/8," 1-5/8," 2" & 2-1/2"	33–97	20–12 ga
(400) 4"	1-3/8," 1-5/8," 2" & 2-1/2"	33–97	20–12 ga
(550) 5-1/2"	1-5/8," 2" & 2-1/2"	33–97	20–12 ga
(600) 6"	1-3/8," 1-5/8," 2," 2-1/2" & 3"	33–97	20–12 ga
(800) 8"	1-3/8," 1-5/8," 2," 2-1/2" & 3"	33–97	20–12 ga
(925) 9-1/4"	1-5/8," 2" & 2-1/2"	43–97	18–12 ga
(1000) 10"	1-5/8," 2," 2-1/2" & 3"	43–97	18–12 ga
(1200) 12"	1-5/8," 2," 2-1/2" & 3"	54–97	16–12 ga
(1400) 14"	1-5/8," 2," 2-1/2" & 3"	54–97	16–12 ga

ClarkDietrich return lip dimensions

Flange width	Return lip	Member depths
137 (1-3/8")	3/8"	3-5/8"–8"
162 (1-5/8")	1/2"	2-1/2"–14"
200 (2")	5/8"	3-5/8"–14"
250 (2-1/2")	5/8"	3-5/8"–14"
300 (3")	5/8"	6"–14"

Old stud/track designations

Designation	Type	Flange/leg
CWN	Stud	1-3/8"
CSJ	Stud	1-5/8"
CSW	Stud	2"
CSE	Stud	2-1/2"
CSS	Stud	3"
TSB	Track	1-1/4"
TSC	Track	2"
TSE	Track	3"

ClarkDietrich thickness identification and color coding

Member mils	Thickness gauge	Design thickness	Min. thickness	Color code
33	20	0.0346"	0.0329"	White
43	18	0.0451"	0.0428"	Yellow
54	16	0.0566"	0.0538"	Green
68	14	0.0713"	0.0677"	Orange
97	12	0.1017"	0.0966"	Red

ClarkDietrich ProSTUD® Drywall framing system thickness

Member gauge	Mils	KSI	Design thickness	Min. thickness	Color code
ProSTUD 25	15	50	0.0158	0.0150	None
ProSTUD 20	18	70	0.0190	0.0181	Brown
ProSTUD 20LTD	19	65	0.0200	0.0190	Brown
ProSTUD 30MIL	30	33	0.0312	0.0296	Pink
ProSTUD 33MIL	33	33	0.0346	0.0329	White

ProTRAK (25, 20 & 20LTD) = 50ksi ProTRAK 30 & 33mil = 33ksi
ProSTUD 20 LTD / 19mil (65ksi) Available for limited time.
Contact your ClarkDietrich Sales Representative for market availability.

HOW TO IDENTIFY OUR PRODUCTS

ClarkDietrich has adopted standard nomenclature established by the American Iron and Steel Institute (AISI) for identifying each of its products. Coding of each member consists of four parts, in this order:

- A number which identifies the web depth of the member to two decimal places. 600 = 6.00," 1000 = 10.00," 550 = 5.50," 362 = 3.625," etc.
- A letter that tells you the type of member, such as S = Stud/joist, T = Track, U = U-channel, and F = Furring channel.
- A number that defines the flange dimension in inches to two decimal places. 162 = 1.625," 200 = 2.00," 125 = 1.25," etc.
- A number following a hyphen that denotes the minimum delivered thickness in mils (33mils = 33/1000 inches which is approximately 0.0329"). Minimum delivered thickness is 95% of design thickness.

Product availability.

Most products manufactured by ClarkDietrich are readily available in all markets, but there can be exceptions. Please contact your ClarkDietrich Sales Representative to make sure the product you need is available in your market area.

Protective coatings.

Non-structural products are coated to meet the requirements of AISI S220 and ASTM C645, with a G40 or a protective coating with an equivalent corrosion resistance. ProSTUD® Drywall Framing System meets the Code Compliance Research Report ATI CCRR-0207. Non-structural products may also be ordered with enhanced coatings for special applications.

Structural framing products are available with a variety of protective coatings that meet the CP60 coating protection level requirements of AISI S200 and ASTM C955. These coatings may include G60, A60, AZ50 or GF30, all of which satisfy the above referenced standards. G90 coatings are an enhanced option that can be requested for highly corrosive environments. ClarkDietrich can supply a specific or enhanced coating to meet specific project requirements when requested.

ClarkDietrich Material Certification—Code Approvals and Performance

Structural framing standards

AISI S100-16 "North American Specification for the Design of Cold-Formed Steel Structural Members

ASTM C955	Load-bearing steel framing
ASTM C1007	Installation
ASTM A1003	Material specification for steel sheet

Protective coating standards

ASTM A653	Zinc-coated hot-dip process
ASTM A792	55% aluminum-zinc alloy-coated hot-dip process
ASTM A875	Zinc-5% aluminum alloy-coated hot-dip process

Additional code approvals

SFIA (Steel Framing Industry Association)
ICC-ES ESR-1166P

ProSTUD® drywall framing standards

AISI S100 2012 "North American Specification for the Design of Cold-Formed Steel Structural Members"

ASTM American Society for Testing and Materials

A653	Zinc-coated hot-dip process
A1003	Material specification for steel sheet
C645	Standard specification for nonstructural steel framing
C754	Standard specification for installation of steel framing
C1002	Standard specification for steel self piercing tapping screw
E119	Standard test methods for fire tests
E72	Standard test methods of conducting strength tests
E90	Standard test method for sound transmission loss

UL® Underwriters Laboratories testing standard

UL 263 Fire Tests of Building Construction and Materials

Multiple UL® design listings for ProSTUD

Over 50 UL Designs; UL file number R26512

Additional code approvals

IAPMO #0189–Non-composite (updates pending)
IAPMO #0171–Composite (updates pending)

UL® and UL® Design are trademarks of Underwriters Laboratories, Inc.

Metal lath & accessories

ASTM C847	Metal lath
ASTM C841	Installation of interior lathing & furring
ASTM C1063	Installation of lathing & furring
ASTM A653	Zinc-coated hot-dip process
ASTM C1047	Accessories standards—control joints
ASTM A924	Metallic-coated hot-dip process
UUB790A	APB type 1, grade D, style 2
CE 240.01	Furring (metal) lathing and plastering
EMLA 920	Guide specs for metal lathing & furring

Additional code approvals

ICC ESR-2698 & ESR-2161

USGBC and related logo is a trademark owned by the U.S. Green Building Council and is used by permission.

ClarkDietrich Building Systems has prepared this literature with the utmost diligence and care for accuracy and conformance to standards.

ClarkDietrich Building Systems reserves the right to modify or change any information contained in this literature without notification.

ClarkDietrich Building Systems intends this information to be accurate, informative, and helpful as a selection guide for choosing ClarkDietrich Building System products. However, this information is only to be used for guidance and is not intended to replace the design, drawings, specifications, and decisions of a professional architect or engineer.

ClarkDietrich Building Systems or its affiliates shall not be responsible for incidental or consequential damages, directly or indirectly sustained, nor for loss caused by application of our products for other than their intended uses. Our liability is limited to replacement of defective products. Claims shall be deemed waived unless they are made to us in writing within thirty (30) days of the date a problem was or reasonably should have been discovered.

ClarkDietrich structural and nonstructural framing comply with the SFIA Code Compliance Program. ClarkDietrich is a member of SFIA.

Check the updated list of Certified Production Facilities at Architectural Testing's website at www.archtest.com.

For ClarkDietrich iTools, scan the QR code.

LOCATIONS

ClarkDietrich Manufacturing and Sales Locations:

CALIFORNIA Riverside
P 951.360.3500

CALIFORNIA Sacramento
P 951.360.3500

CONNECTICUT Bristol
P 866.921.0023

FLORIDA Dade City
P 352.518.4400

FLORIDA Miami
P 305.477.6464

GEORGIA McDonough
P 678.304.5500

ILLINOIS Rochelle
P 800.659.0745

MARYLAND Baltimore
P 410.477.4000

MISSOURI O'Fallon
P 636.300.1411

OHIO Warren-East
P 330.372.5564

OHIO Vienna
P 330.372.4014

TEXAS Dallas
P 214.350.1716

TEXAS Pasadena
P 281.383.1617

ClarkDietrich Engineering Services. A full spectrum of solutions.

Toll-Free Phone: 877.832.3206
Toll-Free Fax: 877.832.3208
Technical Services: 888.437.3244
Email: engineering@clarkdietrich.com

CENTRAL Crown Point, IN
SOUTHEAST McDonough, GA
NORTHEAST Bristol, CT
WEST Carlsbad, CA

Safety Data Sheet (SDS)

ClarkDietrich BUILDING SYSTEMS

Section 1 – Identification

1(a) Product Identifier used on Label: Coated Steel Sheet

1(b) Use/Description: Coated Steel Sheet for thin gauge framing products.

1(d) Products: Cold-Formed Steel Framing components and accessories for drywall, curtain wall and load bearing systems. Also includes metal lath and plaster accessories.

1(d) Synonyms: Hot Band, Cold Rolled, P&O, Galvanized.

1(e) Company Identification and Emergency Contact Information: ClarkDietrich Building Systems

Corporate Office:

9050 Centre Point Drive, Suite 400
West Chester, OH 45069
Phone: 513-870-1100
Fax: 513-870-1300
http://www.clarkdietrich.com/

Manufacturing Locations:

Baltimore, MD	Baytown, TX	Bristol, CT	Dade City, FL
Dallas, TX	Vienna, OH	McDonough, GA	Riverside, CA
Rochelle, IL	Sacramento, CA	Warren, OH	

Section 2 – Hazard(s) Identification

2(a) Classification of the chemical: Coated Steel Sheet is considered an article under Reach regulation (REACH REGULATION (EC) No 1907/2006) and is not subject to classification under CLP regulation (REGULATION (EC) No 1272/2008). However, Coated Steel Sheet is not exempt as an article under OSHA's Hazard Communication Standard (29 CFR 1910.1200) due to its downstream use, thus this product is considered a mixture and a hazardous material. Therefore, the categories of Health Hazards as defined in "GLOBALLY HARMONIZED SYSTEM OF CLASSIFICATION AND LABELLING OF CHEMICALS (GHS), Third revised edition ST/SG/AC.10/30/Rev.3" United Nations, New York and Geneva, 2009 have been evaluated. Refer to Section 3, 8 and 11 for additional information.

2(b) Signal word, hazard statement(s), symbols and precautionary statement(s):

Hazard Symbol	Hazard Classification	Signal Word	Hazard Statement(s)
	Carcinogenicity - 2 Reproductive Toxicity - 2 Single Target Organ Toxicity (STOT) Repeat Exposure -1	**Danger**	Suspected of causing cancer. Suspected of damaging fertility or the unborn child. Causes damage to lungs and central nervous system through prolonged or repeated inhalation exposure.
	Acute Toxicity-Oral - 4 Skin Sensitization - 1 STOT Single Exposure - 3		Harmful if swallowed. May cause an allergic skin reaction. Harmful in contact with skin. May cause respiratory irritation.
NA	Eye Irritation-2B		Causes eye irritation.

Precautionary Statement(s):

Prevention	Response	Storage/Disposal
Do not breathe dusts / fume / gas / mist / vapor / spray. Wear protective gloves / protective clothing / eye protection / face protection. Contaminated work clothing must not be allowed out of the workplace. Use only outdoors or in well ventilated areas. Wash thoroughly after handling. Obtain special instructions before use. Do not handle until all safety precautions have been read and understood. Do not eat, drink or smoke when using this product.	If inhaled: Remove person to fresh air and keep comfortable for breathing. If exposed, concerned or feel unwell: Get medical advice/attention. If in eyes: Rinse cautiously with water for several minutes. Remove contact lenses, if present and easy to do. Continue Rinsing. If on skin: Wash with plenty of water. If irritation or rash occurs: Get medical advice/attention. Take off and wash contaminated clothing before reuse. Call a poison center/doctor if you feel unwell.	Dispose of contents in accordance with federal, state and local regulations.

2(c) Hazards not otherwise classified: None Known

2(d) Unknown acute toxicity statement (mixture): None Known

This is only 1 of the 9 pages. You can view the full report or our EPDs and HPDs at the following location: www.clarkdietrich.com/support-tools/support-docs

STRUCTURAL CALCULATIONS
COLD-FORMED STEEL FRAMING
PROJECT 2030860

GARRETT COLLEGE CEPAC

McHENRY, MD

REVISION #1

TABLE OF CONTENTS

1	COVER
2	GENERAL NOTES
3	DESIGN CRITERIA
4 - 26	REVISION 1 STRUCTURAL CALCULATIONS

STATE OF MARYLAND
KARL SCHERZER
No. 30311
PROFESSIONAL ENGINEER

Professional Certification
I hereby certify that these documents were prepared or approved by me, and that I am a duly licensed professional engineer under the laws of the State of Maryland, License No. 30311, Expiration Date: 05/20/2022

MAR. 12, 2021

GENERAL NOTES

1. EXCEL ENGINEERING IS ACTING AS A SPECIALTY STRUCTURAL COMPONENT ENGINEER, DESIGNING THE COLD-FORMED STEEL FRAMING OF THE PROJECT ONLY. EXCEL ENGINEERING TAKES FULL RESPONSIBILITY FOR THE DESIGN OF THE STRUCTURAL COLD-FORMED STEEL FRAMING AND THEIR ATTACHMENT TO THE SUPPORTING STRUCTURAL ELEMENTS OF THE BUILDING. EXCEL ENGINEERING TAKES NO RESPONSIBILITY FOR THE DESIGN OF ANY SUPPORTING STRUCTURAL ELEMENTS. IT IS ASSUMED THAT ALL SUPPORTING STRUCTURAL ELEMENTS HAVE BEEN DESIGNED BY THE PROJECT ENGINEER OF RECORD (EOR) AND/OR ARCHITECT OF RECORD (AOR) TO WITHSTAND THE FORCES IMPOSED BY THE STRUCTURAL COLD-FORMED STEEL FRAMING. EXCEL ENGINEERING EXPECTS THAT THIS COMPONENT SUBMITTAL WILL BE REVIEWED BY THE EOR AND/OR AOR FOR CONFORMANCE WITH THE OVERALL PROJECT REQUIREMENTS.
2. SECTION PROPERTIES ARE ASSUMED TO BE IN ACCORDANCE WITH THE AMERICAN IRON AND STEEL INSTITUTE "NORTH AMERICAN SPECIFICATION FOR THE DESIGN OF COLD-FORMED STEEL STRUCTURAL MEMBERS" 2012 EDITION WITH SUPPLEMENTS. THE CONTRACTOR IS TO VERIFY THAT THE MATERIALS INSTALLED MEET OR EXCEED THESE DESIGN VALUES.
3. ALL COLD-FORMED STEEL FRAMING HAS BEEN DESIGNED FOR UNIFORM LATERAL LOADS AND WALL CONSTRUCTION DEAD LOADS ONLY. THE WEIGHT OF ANY MASONRY VENEER IS ASSUMED TO BE SUPPORTED INDEPENDENT OF THE COLD-FORMED STEEL FRAMING, U.N.O. THE COLD-FORMED STEEL FRAMING HAS BEEN DESIGNED TO LATERALLY SUPPORT ANY MASONRY VENEER.
4. ALLOWABLE STRESS HAS NOT BEEN INCREASED DUE TO WIND. HOWEVER, THE STRENGTH LEVEL WIND LOAD HAS BEEN REDUCED TO 42% (70% FOR SERVICE LEVEL) FOR THE PURPOSE OF DETERMINING DEFLECTION PER IBC 2015, TABLE 1604.3, NOTE F.
5. THE CONTENTS OF THIS SUBMITTAL SHOW THE APPLICATION OF COLD-FORMED STEEL FRAMING COMPONENTS. THE FRAMING CONTRACTOR IS TO REFER TO THE PROJECT CONTRACT DOCUMENTS FOR ADDITIONAL REQUIREMENTS.
6. DIMENSIONS SHOWN HEREIN ARE FOR ENGINEERING PURPOSES **ONLY** AND MUST BE REVIEWED FOR THE PURPOSE OF APPROVAL. ALL CONDITIONS ARE SUBJECT TO SUCH APPROVAL, AND TO FIELD VERIFICATION PRIOR TO FABRICATION OR ERECTION.
7. MECHANICAL BRIDGING SHALL BE USED IN ALL CASES WHERE INDICATED. INSTALLATION OF BRIDGING MUST BE COMPLETED BEFORE ANY LOADS ARE APPLIED TO THE SYSTEM. ALL BRIDGING SHALL BE TERMINATED AT JAMBS, CORNER STUDS OR COLUMNS. BRIDGING ENDS SHALL **NOT** HANG LOOSE. STUDS SHALL BE BRACED AGAINST ROTATION.
8. FOR SPECIFIC REQUIREMENTS AND WARRANTY INFORMATION ON SYSTEMS OR MATERIALS CONNECTED AND APPURTENANT TO THE COLD-FORMED STEEL FRAMING INCLUDING CLADDING, SHEATHING, ROOFING, WINDOWS, DOORS, CAULKING AND FLASHING, REFER TO THE MANUFACTURERS' DATA. THIS SUBMITTAL ASSUMES NO RESPONSIBILITY FOR THE PROPER CONSTRUCTION OR FUNCTION OF THE TOTAL ARCHITECTURAL ASSEMBLY. THE COORDINATION OF ARCHITECTURAL AND/OR STRUCTURAL BUILDING COMPONENTS IS NOT UNDER THE SCOPE OF THIS SUBMITTAL OR CONTRACT.
9. ALL FRAMING COMPONENTS SHALL BE CUT SQUARELY FOR ATTACHMENT TO PERPENDICULAR MEMBERS. STUD ENDS MUST SEAT TIGHTLY INTO TRACKS IN ALL BEARING APPLICATIONS.
10. NO SPLICES IN STUDS, JOISTS, HEADERS, OR OTHER LOAD CARRYING MEMBERS MAY BE MADE WITHOUT PRIOR ENGINEERING REVIEW AND SPECIFIC DETAILS FOR ANY SUCH REVISION TO THE ORIGINAL DESIGN.
11. THIS SUBMITTAL DOES **NOT** TAKE PRECEDENCE OVER THE CONTRACT DOCUMENTS WITH REGARD TO MINIMUM KSI, THICKNESS, DEPTH, FLANGE WIDTH, OR SPACING, UNLESS APPROVED BY THE EOR AND/OR AOR.
12. THE CONNECTOR VALUES USED IN THIS SUBMITTAL ARE FROM PUBLISHED MANUFACTURER SPECIFICATIONS (VALUES ENCLOSED). ALL SCREW AND WELD VALUES ARE BASED ON THE 2015 AISI NORTH AMERICAN SPECIFICATION FOR THE DESIGN OF COLD-FORMED STEEL STRUCTURAL MEMBERS WITH SUPPLEMENTS. WELDING PROCEDURE SHALL BE IN ACCORDANCE WITH AWS D1.3-08. THE CONTRACTOR SHALL CONFIRM WITH THE MANUFACTURER THAT THE CONNECTORS THEY INTEND TO USE MEET OR EXCEED THE DESIGN VALUES REQUIRED.
13. THE CONTRACTOR IS RESPONSIBLE TO NOT OVERLOAD MEMBERS DURING CONSTRUCTION OR ERECTION AND TO SUPPLY ADEQUATE TEMPORARY BRACING UNTIL PERMANENT BRIDGING PROVIDING STABILITY TO BOTH FLANGES IS IN PLACE.
14. TOUCH-UP ALL WELDS WITH ZINC-RICH PAINT (ASTM A-780). APPLY TO BOTH SIDES OF STUD.
15. FUTURE EXPANSION HAS **NOT** BEEN CONSIDERED AS PART OF THE DESIGN OF THIS PROJECT.
16. THE CONTRACTOR IS CAUTIONED AS TO NOT STORE ANY CONSTRUCTION MATERIALS OR UNDERTAKE ANY CONSTRUCTION OPERATION WHICH WILL EXCEED THE DESIGN LIVE LOAD CAPACITIES NOTED.

DESIGN CRITERIA

GOVERNING CODES

2015 "INTERNATIONAL BUILDING CODE"	IBC 2015
2010 "MINIMUM DESIGN LOADS FOR BUILDINGS AND OTHER STRUCTURES"	ASCE 7-10
2012 "NORTH AMERICAN SPECIFICATION FOR THE DESIGN OF COLD-FORMED STEEL STRUCTURAL MEMBERS"	AISI S100-12
2008 "STRUCTURAL WELDING CODE - SHEET STEEL"	AWS D1.3-08
2014 "BUILDING CODE REQUIREMENTS FOR STRUCTURAL CONCRETE"	ACI 318-14

DESIGN STRESSES

CONCRETE	3500 PSI	= COMPRESSIVE STRENGTH (f'c)
STRUCTURAL STEEL	36 KSI (MIN)	= YIELD STRESS (Fy) - ASTM A-36: ALL SHAPES U.N.O.
COLD-FORMED STEEL FRAMING	33 KSI (MIN)	= YIELD STRESS (Fy) - A1003 U.N.O.
WELD ELECTRODES	60 KSI (MIN)	= TENSILE STRENGTH (Fxx) @ THICKNESS < 1/8" (CFS FRAMING)
	70 KSI (MIN)	= TENSILE STRENGTH (Fxx) @ ALL OTHER THICKNESS

DESIGN LOADING

WIND:

120 MPH	= STRENGTH LEVEL WIND SPEED
93 MPH	= EQUIVALENT SERVICE LEVEL WIND SPEED
II	= RISK CATEGORY
''C''	= EXPOSURE CATEGORY
0.18	= INTERNAL PRESSURE COEFFICIENT

STRENGTH LEVEL C&C PRESSURE/SUCTION (MINIMUM = 16 PSF)

ZONE		EFFECTIVE AREA (FT^2)							
		10.0		50.0		100.0		200.0	
WALL	4	33.81	-36.62	30.33	-33.15	28.83	-31.65	27.33	-30.15
WALL	5	33.81	-45.07	30.33	-38.12	28.83	-35.12	27.33	-32.13

STRENGTH LEVEL LOADS MAY BE REDUCED TO 42% FOR THE PURPOSE OF DETERMINING DEFLECTION PER IBC 2015, TABLE 1604.3, NOTE F

SERVICE LEVEL (D+.6W) C&C PRESSURE/SUCTION (MINIMUM = 9.6 PSF)

ZONE		EFFECTIVE AREA (FT^2)							
		10.0		50.0		100.0		200.0	
WALL	4	20.28	-21.97	18.20	-19.89	17.30	-18.99	16.40	-18.09
WALL	5	20.28	-27.04	18.20	-22.87	17.30	-21.07	16.40	-19.28

SERVICE LEVEL LOADS MAY BE REDUCED TO 70% FOR THE PURPOSE OF DETERMINING DEFLECTION PER IBC 2015, TABLE 1604.3, NOTE F.

SEISMIC:

II	= RISK CATEGORY	S_S = 0.110 S_1 = 0.054	I_E = 1.00
''D''	= SITE CLASS	S_{DS} = 0.117 S_{D1} = 0.086	
''B''	= SEISMIC DESIGN CATEGORY		
1.97 PSF	= 0.7E (WALL ELEMENTS)	**WIND LOAD CONTROLS**	
6.16 PSF	= 0.7E (FASTENERS)	**WIND LOAD CONTROLS**	

DEAD:

50 PSF	= WALL DEAD LOAD @ BRICK VENEER	(46 PSF ACTUAL)
10 PSF	= WALL DEAD LOAD EVERYWHERE ELSE	(6 PSF ACTUAL)
10 PSF	= SOFFIT DEAD LOAD	(4 PSF ACTUAL)

DEFLECTION LIMITS (BASED ON STUD PROPERTIES ALONE):

L / 600	WL	@ BRICK VENEER	(PER SPECIFICATION)
L / 360	WL	EVERYWHERE ELSE	(PER SPECIFICATION)
1 in.		SLIP GAP	(PER SPECIFICATION)

EXCEL ARCHITECTS • ENGINEERS • SURVEYORS	100 CAMELOT DRIVE FOND DU LAC, WI 54935 P: 920|926|9800 F: 920|926|9801 www.excelengineer.com	PROJECT:	Garrett College CEPAC	PAGE:	4
		LOCATION:	McHenry, MD		
		CLIENT:	Leonard S. Fiore	DATE:	7/13/2020
		PROJECT #:	2030860	ENGR:	EJ

DESIGN WIND LOAD COEFFICIENTS: ASCE 7-10

BASIC WIND SPEED (3-SECOND GUST) =	**120.0**	MPH	V	FIGURE 26.5-1
EXPOSURE CATEGORY =	**C**			26.7.3
BUILDING DIMENSION (GABLE) =	**156.83**	FT		
BUILDING DIMENSION (EAVE) =	**233.25**	FT		
JOIST SUPPORT HEIGHT =	**32.50**	FT	hj	
JOIST SPACING =	**0.00**	FT	s	
PARAPET HEIGHT =	**0.00**	FT	hp	
ROOF PITCH =	**0.00**	/12	r	
BUILDING STYLE =	**ENCLOSED**			26.2
TOPOGRAPHIC TYPE =	**NONE**			26.2
HEIGHT OF TOPOGRAPHIC RELATIVE TO UPWIND TERRAIN =	**0.00**	FT	H	FIGURE 26.8-1
UPWIND DISTANCE TO DIFFERENCE IN ELEVATION OF 1/2 TOPOGRAPHIC HEIGHT =	**0.00**	FT	L_h	FIGURE 26.8-1
DISTANCE FROM CREST TO BUILDING SITE (DOWNWIND POSITIVE) =	**0.00**	FT	x	FIGURE 26.8-1
BUILDING HEIGHT = (hj+hp) =	32.50		z	
MEAN ROOF HEIGHT =	32.50	FT	h	26.2
MINIMUM HEIGHT EXPOSURE CONSTANT =	15.00	FT	z_{min}	TABLE 26.9-1
EQUIVALENT HEIGHT OF STRUCTURE = max(z_{min},(.6)(h)) =	19.50	FT	zb	TABLE 26.9-1
HEIGHT OF ATMOSPHERIC BOUNDARY LAYER =	900.00	FT	z_g	TABLE 26.9.1
3-SECOND GUST SPEED POWER LAW EXPONENT =	9.50		a	TABLE 26.9.1
VELOCITY PRESSURE EXPOSURE COEFFICIENT AT z (C&C) =	0.999		K_{Z1}	TABLE 30.3-1
VELOCITY PRESSURE EXPOSURE COEFFICIENT AT h (MWFRS) =	0.999		K_{h2}	TABLE 27.3-1
VELOCITY PRESSURE EXPOSURE COEFFICIENT AT h (C&C) =	0.999		K_{h1}	TABLE 30.3-1
WIND DIRECTIONALITY FACTOR =	**0.85**		K_d	TABLE 26.6-1
RATIO OF TOPOGRAPHIC HEIGHT TO DISTANCE OF 1/2 TOPOGRAPHIC HEIGHT =	0.000		H/L_h	
RATIO OF DISTANCE FROM CREST TO BUILDING TO DISTANCE OF 1/2 TOPOGRAPHIC HEIGHT =	0.000		x/L_h	
HORIZONTAL ATTENUATION FACTOR =	1.000		μ	FIGURE 26.8-1
HEIGHT ATTENUATION FACTOR =	1.000		γ	FIGURE 26.8-1
TOPOGRAPHIC SHAPE & MAX. SPEED UP EFFECT FACTOR =	1.050		C_{K1}	FIGURE 26.8-1

	z=h/3	z=h			
$K_1 = (C_{K1})(H/L_h)$ =	1.000	1.000		K_1	FIGURE 26.8-1
$K_2 = (1-((\|x\|/(L_h))/(\mu))$ =	1.000	1.000		K_2	FIGURE 26.8-1
$K_3 = e^{((-\gamma)(z)/(Lh))}$ =	1.000	1.000		K_3	FIGURE 26.8-1
TOPOGRAPHIC FACTOR = $(1+(K_1)(K_2)(K_3))^2$ =	**1.00**	**1.00**		K_{zt}	FIGURE 26.8-1
VELOCITY PRESSURE @ z (C&C) = $(.00256)(K_Z)(K_{zt})(K_d)(V^2)$ =		31.30	PSF	q_Z	EQ. 30.3-1
VELOCITY PRESSURE @ z (MWFRS) = $(.00256)(K_Z)(K_{zt})(K_d)(V^2)$ =		31.30	PSF	q_{Z2}	EQ. 27.3-1
VELOCITY PRESSURE @ h (MWFRS) = $(.00256)(K_{h2})(K_{zt})(K_d)(V^2)$ =		31.30	PSF	q_{h2}	EQ. 27.3-1
VELOCITY PRESSURE @ h (C&C) = $(.00256)(K_{h1})(K_{zt})(K_d)(V^2)$ =		31.30	PSF	q_h	EQ. 30.3-1

	eave	gable			
INTEGRAL LENGTH SCALE FACTOR =	500.00	500.00		ℓ	TABLE 26.9-1
INTEGRAL LENGTH SCALE POWER LAW EXPONENT =	0.20	0.20		$\in$	TABLE 26.9-1
INTEGRAL LENGTH SCALE OF TURBULENCE = $\ell(zb/33)^{\in}$ =	450.06	450.06		L_z	EQ. 26.9-9
BACKGROUND RESPONSE = $(1/(1+(.63)((B+h)/L_z)^{.63}))^{.5}$ =	0.83	0.86		Q	EQ. 26.9-8
TURBULENCE INTENSITY FACTOR =	0.20	0.20		c	TABLE 26.9-1
INTENSITY OF TURBULENCE = $(c)(33/zb)^{(1/6)}$ =	0.22	0.22		I_Z	EQ. 26.9-7
GUST EFFECT FACTOR = $(.925)((1+1.7(3.4)(I_Z)(Q))/(1+(1.7)(3.4)(I_Z))$ =	0.84	0.85		G	EQ. 26.9-6
INTERNAL PRESSURE COEFFICIENT =	0.18	0.18		GC_{pi}	TABLE 26.11-1

EDGE STRIP DIMENSION (10% of least horizontal dimension) =		15.68	FT	a	FIGURE 30.4-1
EDGE STRIP DIMENSION (.4)(z) =	CONTROLS	13.00	FT	a	FIGURE 30.4-1
EDGE STRIP DIMENSION (4% of least horizontal dimension) =		6.27	FT	a	FIGURE 30.4-1
EDGE STRIP DIMENSION (3 ft) =		3.00	FT	a	FIGURE 30.4-1

COMPONENT WIND LOAD DETERMINATION

ASCE 7-10

BASIC WIND SPEED (3-SECOND GUST) =	120.00	MPH	V	FIGURE 26.5-1
EXPOSURE CATEGORY =	C			26.7.3
ROOF PITCH =	0.00	DEG	θ	
ROOF PITCH REDUCTION =	ON			
MEAN ROOF HEIGHT =	32.50	FT	h	26.2
PARAPET HEIGHT =	0.00	FT	hp	
PARAPET LIMITING HEIGHT & CONTINUITY =	NO			
VELOCITY PRESSURE @ Z (C&C) =	31.30	PSF	q_z	EQ. 30.3-1
VELOCITY PRESSURE @ h (C&C) =	31.30	PSF	q_h	EQ. 30.3-1
INTERNAL PRESSURE COEFFICIENT =	0.18		GC_{pi}	TABLE 26.11-1
EDGE ZONE DIMENSION =	13.00	FT	a	FIGURE 30.4-1

EXTERNAL PRESSURE COEFFICIENTS

ZONE		EFFECTIVE AREA (FT^2) 10.0		50.0		100.0		200.0		A	
ROOF	1	0.30	-1.00	0.23	-0.93	0.20	-0.90	0.20	-0.90	GC_p	FIGURE 30.4-2A
ROOF	2	0.30	-1.80	0.23	-1.31	0.20	-1.10	0.20	-1.10	GC_p	FIGURE 30.4-2A
ROOF	3	0.30	-2.80	0.23	-1.61	0.20	-1.10	0.20	-1.10	GC_p	FIGURE 30.4-2A
OH	1	0.30	-1.70	0.23	-1.63	0.20	-1.60	0.20	-1.39	GC_p	FIGURE 30.4-2A
OH	2	0.30	-1.70	0.23	-1.63	0.20	-1.60	0.20	-1.39	GC_p	FIGURE 30.4-2A
OH	3	0.30	-2.80	0.23	-1.40	0.20	-0.80	0.20	-0.80	GC_p	FIGURE 30.4-2A
WALL	4	0.90	-0.99	0.79	-0.88	0.74	-0.83	0.69	-0.78	GC_p	FIGURE 30.4-1
WALL	5	0.90	-1.26	0.79	-1.04	0.74	-0.94	0.69	-0.85	GC_p	FIGURE 30.4-1

- PER ASCE 7-10 FIGURE 30.4-1, NOTE 5: VALUES OF GCp FOR WALLS MAY BE REDUCED BY 10% WHEN ROOF PITCH <=10 DEGREES

COMPONENT PRESSURE = (qh)[(GCp)-(-GCpi)]	PSF	p	EQ. 30.4-1
COMPONENT SUCTION = (qh)[(GCp)-(+GCpi)]	PSF	p	EQ. 30.4-1

STRENGTH LEVEL C&C PRESSURE/SUCTION (MINIMUM = 16 PSF)

ZONE		EFFECTIVE AREA (FT^2) 10.0		50.0		100.0		200.0		A
ROOF	1	16.00	-36.94	16.00	-34.75	16.00	-33.81	16.00	-33.81	
ROOF	2	16.00	-61.98	16.00	-46.66	16.00	-40.07	16.00	-40.07	
ROOF	3	16.00	-93.28	16.00	-56.08	16.00	-40.07	16.00	-40.07	
OH	1	16.00	-53.21	16.00	-51.02	16.00	-50.08	16.00	-43.54	
OH	2	16.00	-53.21	16.00	-51.02	16.00	-50.08	16.00	-43.54	
OH	3	16.00	-87.64	16.00	-43.89	16.00	-25.04	16.00	-25.04	
WALL	4	33.81	-36.62	30.33	-33.15	28.83	-31.65	27.33	-30.15	
WALL	5	33.81	-45.07	30.33	-38.12	28.83	-35.12	27.33	-32.13	

- NOTE: FOR OH, $GC_{pi} = 0$

2007 NASPEC [AISI S100]

Project: 2030860-GARRETT COLLEGE CEPAC **Date:** 3/9/2021
Model: 1/S1 WALL STUD (ZONE 5)

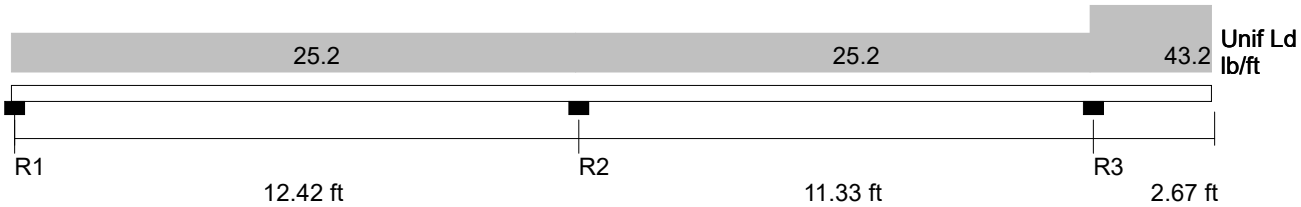

Section : 600S162-43 Single C Stud (X-X Axis) **Fy =** 33.0 ksi
Maxo = 1390.0 Ft-Lb **Moment of Inertia, I =** 2.316 in^4 **Va =** 1415.7 lb

Deflection limits: Ratio L/ 360

Loads have not been modified for strength checks
Loads have been multiplied by 0.70 for deflection calculations

Flexural and Deflection Check

Span	Mmax Ft-Lb	Mmax/ Maxo	Mpos Ft-Lb	Bracing (in)	Ma(Brc) Ft-Lb	Mpos/ Ma(Brc)	Deflection (in)	Ratio
Left Span	409.9	0.295	302.2	72	1002.0	0.302	0.070	L/2143
Right Span	409.9	0.295	132.2	Full	1390.0	0.095	0.017	L/8211
Right Cant.	154.0	0.111	98.3	None	1271.1	0.077	0.003	L/8987

Ireq'd = 0.389 in^4

Distortional Buckling Check

Span	K-phi lb-in/in	Lm Brac (in)	Ma-d Ft-Lb	Mmax/ Ma-d
Left Span	0.00	149.0	1205.1	0.340
Right Span	0.00	136.0	1205.1	0.340
Right Cant.	0.00	32.0	1205.1	0.128

Combined Bending and Web Crippling

Reaction or Pt Load	Load P(lb)	Brng (in)	Pa (lb)	Pn (lb)	Mmax (Ft-Lb)	Intr. Value	Stiffen Req'd ?
R1	123.4	1.00	259.1	453.4	0.0	0.25	No
R2	354.6	1.00	553.3	913.0	409.9	0.53	No
R3	235.4	1.00	553.3	913.0	154.0	0.30	No

Combined Bending and Shear

Reaction or Pt Load	Vmax (lb)	Mmax (Ft-Lb)	Va Factor	V/Va	M/Ma	Intr. Unstiffen	Intr. Stiffen
R1	123.4	0.0	1.00	0.09	0.00	0.09	NA
R2	189.4	409.9	1.00	0.13	0.29	0.32	NA
R3	120.1	154.0	1.00	0.08	0.11	0.14	NA

2007 NASPEC [AISI S100]

Project: 2030860-GARRETT COLLEGE CEPAC **Date:** 3/10/2021
Model: 9/S3 LADDER STUD (ZONE 5)

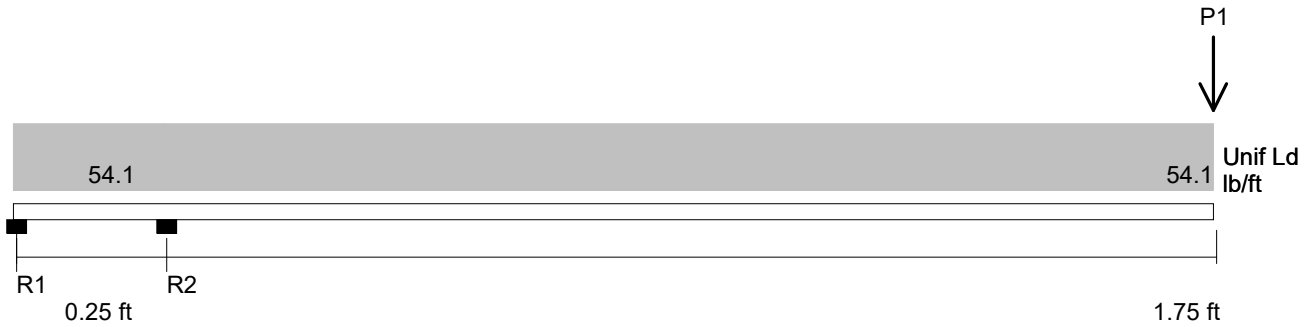

Point Loads	**P1**
Load(lb)	333
X-Dist.(ft)	2.00

Section : (2) 800S200-54 Boxed C Stud (X-X Axis) **Fy =** 50.0 ksi
Maxo = 7477.9 Ft-Lb **Moment of Inertia, I =** 13.145 in^4 **Va =** 4182.6 lb

Deflection limits: Ratio L/ 600

Loads have not been modified for strength checks
Loads have been multiplied by 0.70 for deflection calculations

Flexural and Deflection Check

Span	Mmax Ft-Lb	Mmax/ Maxo	Mpos Ft-Lb	Bracing (in)	Ma(Brc) Ft-Lb	Mpos/ Ma(Brc)	Deflection (in)	Deflection Ratio
Center Span	665.6	0.089	531.5	72	7477.9	0.071	0.000	L/360775
Right Cant.	665.6	0.089	518.4	None	7477.9	0.069	0.002	L/17829
							Ireq'd = 0.442 in^4	

Combined Bending and Web Crippling

Reaction or Pt Load	Load P(lb)	Brng (in)	Pa (lb)	Pn (lb)	Mmax (Ft-Lb)	Intr. Value	Stiffen Req'd ?
R1	**-2655.5**	1.50	1302.9	2280.0	0.0	**1.06**	**YES**
R2	**3096.7**	3.50	1744.8	3053.5	665.6	**0.98**	**YES**
P1	333.0	1.50	1302.9	2280.0	0.2	0.13	No

Combined Bending and Shear

Reaction or Pt Load	Vmax (lb)	Mmax (Ft-Lb)	Va Factor	V/Va	M/Ma	Intr. Unstiffen	Intr. Stiffen
R1	2655.5	0.0	1.00	0.63	0.00	0.63	NA
R2	2669.0	665.6	1.00	0.64	0.09	0.64	NA
P1	333.2	0.2	1.00	0.08	0.00	0.08	NA

2007 NASPEC [AISI S100]

Project: 2030860-GARRETT COLLEGE CEPAC **Date:** 3/10/2021
Model: 10/S3 WALL STUD (ZONE 5)

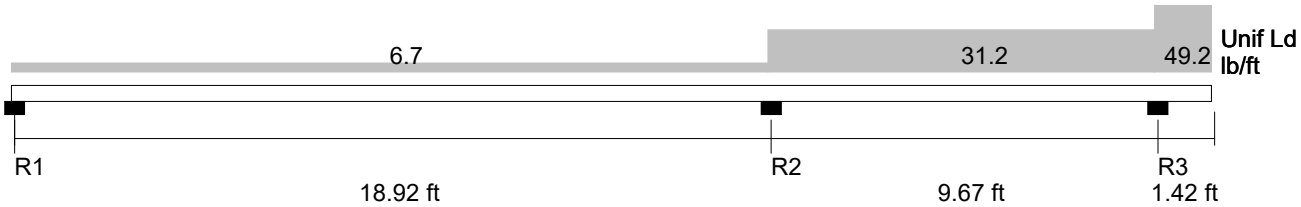

Section : 800S162-43 Single C Stud (X-X Axis) **Fy =** 33.0 ksi
Maxo = 1678.4 Ft-Lb **Moment of Inertia, I =** 4.500 in^4 **Va =** 1051.2 lb

Deflection limits: Ratio L/ 600

Loads have not been modified for strength checks
Loads have not been modified for deflection calculations

Flexural and Deflection Check

Span	Mmax Ft-Lb	Mmax/ Maxo	Mpos Ft-Lb	Bracing (in)	Ma(Brc) Ft-Lb	Mpos/ Ma(Brc)	Deflection (in)	Ratio
Left Span	312.4	0.186	162.7	72	1318.4	0.123	0.057	L/4017
Right Span	312.4	0.186	195.4	72	1353.3	0.144	0.019	L/6085
Right Cant.	49.6	0.030	31.7	None	1678.4	0.019	0.009	L/4844
							Ireq'd = 0.672 in^4	

Distortional Buckling Check

Span	K-phi lb-in/in	Lm Brac (in)	Ma-d Ft-Lb	Mmax/ Ma-d
Left Span	0.00	227.0	1527.4	0.205
Right Span	0.00	116.0	1527.4	0.205
Right Cant.	0.00	17.0	1527.4	0.032

Combined Bending and Web Crippling

Reaction or Pt Load	Load P(lb)	Brng (in)	Pa (lb)	Pn (lb)	Mmax (Ft-Lb)	Intr. Value	Stiffen Req'd ?
R1	46.6	1.00	246.9	432.1	0.0	0.10	No
R2	257.6	1.00	542.0	894.3	312.4	0.37	No
R3	193.5	1.00	246.9	432.1	49.6	0.43	No

Combined Bending and Shear

Reaction or Pt Load	Vmax (lb)	Mmax (Ft-Lb)	Va Factor	V/Va	M/Ma	Intr. Unstiffen	Intr. Stiffen
R1	46.6	0.0	1.00	0.04	0.00	0.04	NA
R2	178.0	312.4	1.00	0.17	0.19	0.25	NA
R3	123.6	49.6	1.00	0.12	0.03	0.12	NA

2007 NASPEC [AISI S100]

Project: 2030860-GARRETT COLLEGE CEPAC **Date:** 3/10/2021
Model: 13/S4 WALL STUD (ZONE 5)

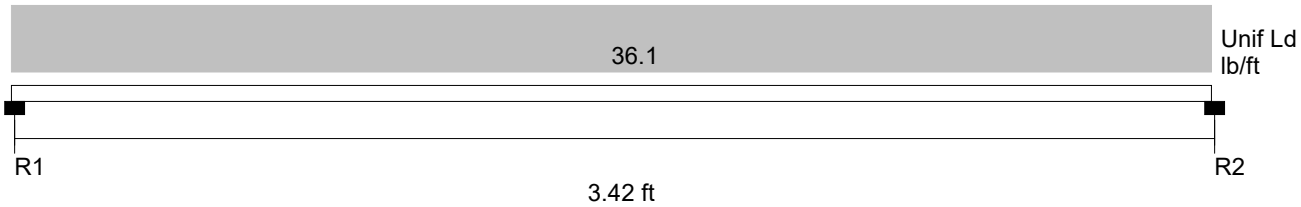

Section : 800S162-43 Single C Stud (X-X Axis) **Fy =** 33.0 ksi
Maxo = 1678.4 Ft-Lb **Moment of Inertia, I =** 4.500 in^4 **Va =** 1051.2 lb

Deflection limits: Ratio L/ 600

Loads have not been modified for strength checks
Loads have not been modified for deflection calculations

Flexural and Deflection Check

Span	Mmax Ft-Lb	Mmax/ Maxo	Mpos Ft-Lb	Bracing (in)	Ma(Brc) Ft-Lb	Mpos/ Ma(Brc)	Deflection (in)	Deflection Ratio
Center Span	52.7	0.031	52.7	None	1678.4	0.031	0.001	L/49081
							Ireq'd = 0.055 in^4	

Distortional Buckling Check

Span	K-phi lb-in/in	Lm Brac (in)	Ma-d Ft-Lb	Mmax/ Ma-d
Center Span	0.00	41.0	1527.4	0.035

Combined Bending and Web Crippling

Reaction or Pt Load	Load P(lb)	Brng (in)	Pa (lb)	Pn (lb)	Mmax (Ft-Lb)	Intr. Value	Stiffen Req'd ?
R1	61.7	1.00	246.9	432.1	0.0	0.13	No
R2	61.7	5.50	453.7	793.9	0.0	0.07	No

Combined Bending and Shear

Reaction or Pt Load	Vmax (lb)	Mmax (Ft-Lb)	Va Factor	V/Va	M/Ma	Intr. Unstiffen	Intr. Stiffen
R1	61.7	0.0	1.00	0.06	0.00	0.06	NA
R2	61.7	0.0	1.00	0.06	0.00	0.06	NA

2007 NASPEC [AISI S100]

Project: 2030860-GARRETT COLLEGE CEPAC **Date:** 3/10/2021
Model: 15/S5 WALL STUD (ZONE 5)

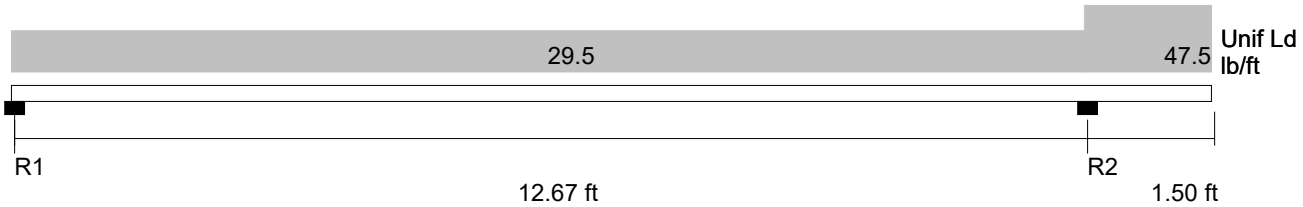

Section : 600S162-43 Single C Stud (X-X Axis) **Fy =** 33.0 ksi
Maxo = 1390.0 Ft-Lb **Moment of Inertia, I =** 2.316 in^4 **Va =** 1415.7 lb

Deflection limits: Ratio L/ 600

Loads have not been modified for strength checks
Loads have been multiplied by 0.70 for deflection calculations

Flexural and Deflection Check

Span	Mmax Ft-Lb	Mmax/ Maxo	Mpos Ft-Lb	Bracing (in)	Ma(Brc) Ft-Lb	Mpos/ Ma(Brc)	Deflection (in)	Ratio
Center Span	565.3	0.407	565.3	72	994.9	0.568	0.166	L/917
Right Cant.	53.5	0.038	34.1	None	1271.1	0.027	0.060	L/839

Ireq'd = 1.656 in^4

Distortional Buckling Check

Span	K-phi lb-in/in	Lm Brac (in)	Ma-d Ft-Lb	Mmax/ Ma-d
Center Span	0.00	152.0	1205.1	0.469
Right Cant.	0.00	18.0	1205.1	0.044

Combined Bending and Web Crippling

Reaction or Pt Load	Load P(lb)	Brng (in)	Pa (lb)	Pn (lb)	Mmax (Ft-Lb)	Intr. Value	Stiffen Req'd ?
R1	182.6	1.00	259.1	453.4	0.0	0.37	No
R2	262.3	1.00	553.3	913.0	53.5	0.28	No

Combined Bending and Shear

Reaction or Pt Load	Vmax (lb)	Mmax (Ft-Lb)	Va Factor	V/Va	M/Ma	Intr. Unstiffen	Intr. Stiffen
R1	182.6	0.0	1.00	0.13	0.00	0.13	NA
R2	191.0	53.5	1.00	0.13	0.04	0.14	NA

BASE MOMENT CONNECTION @ SECTION 16/S5

ASD DESIGN

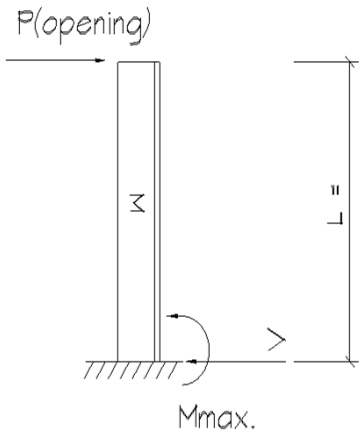

CANTILEVERED STUD ANALYSIS	E_{CONN}	WL		
LATERAL LOAD =	**0.00**	**50.00**	PSF	W
P (OPENING) =	**0.00**	**0.00**	LB	P_o
TRACK DISTRIBUTION FACTOR =		**1.00**		D_f
STUD LENGTH =		**1.42**	FT	L
DEFLECTION CRITERIA = 2L/		**360**		D
UNIFORM LATERAL LOAD =	0.00	66.67	PLF	w
MAX. SHEAR = $wL + D_fP_o$ =	0.00	94.67	LB	V
MAX. MOMENT = $wL^2/2 + D_fP_oL$ =	0.00	806.6	IN-LB	M_{max}
REQUIRED STIFFNESS = $D_fP_oL^3/3ED + wL^4/8ED$ =		0.0147	IN^4	I_{req}

USE: 1 362S162-43 16 " O.C. 33 KSI

ALLOWABLE MOMENT =	7503	IN-LB	M_{ax}	OK
ACTUAL STIFFNESS =	0.7099	IN^4	I_{act}	OK

FASTENERS TO STEEL DESIGN VALUES PER:	SEE DATA SHEEETS
FASTENERS TO STUD DESIGN VALUES PER:	SEE DATA SHEEETS
CLIP DESIGN VALUES PER:	SSMA PUBLISHED VALUES

© 2021 EXCEL ENGINEERING, INC.

SCREW GROUP ANALYSIS

Using the Elastic Method for up to 25 Total Screws

Project Name:		Client:			
Project No.:		Prep. By:		Date:	

Input Data:

Number of Screws, Nb = 4

Screw Coordinates:

	Xo (in.)	Yo (in.)
#1:	0.000	0.000
#2:	4.000	0.000
#3:	0.000	2.500
#4:	4.000	2.500

Results:

Screw Reactions (lbs)

	Axial Rz	Shear Rh
#1:	0.00	66.60
#2:	0.00	106.43
#3:	0.00	66.60
#4:	0.00	106.43

SCREW GROUP PLOT

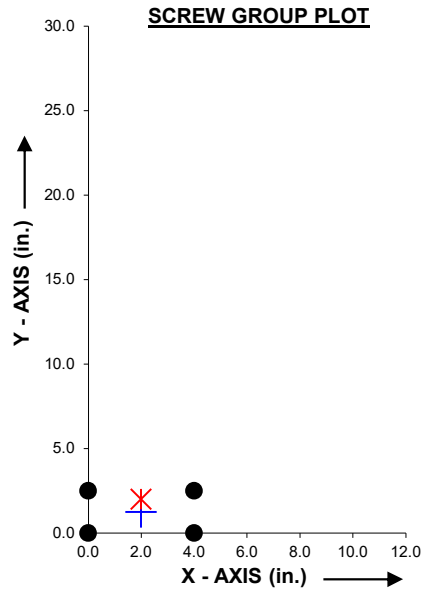

Screw Group Properties:

Xc =	2.000	in.
Yc =	1.250	in.
Ix =	6.25	in.^2
Iy =	16.00	in.^2
J =	22.25	in.^2
Ixy =	0.00	in.^2
θ =	0.000	deg.

No. of Load Points, N = 1

Load Point Data: Point #1

X-Coordinate (in.) =	2.000			
Y-Coordinate (in.) =	2.000			
Z-Coordinate (in.) =	0.000			
Axial Load, Pz (lb) =	0.00			
Shear Load, Px (lb) =	0.00			
Shear Load, Py (lb) =	95.00			
Moment, Mx (in-lb) =	0.00			
Moment, My (in-lb) =	0.00			
Moment, Mz (in-lb) =	807.00			

Σ Loads @ C.G. of Screw Group:

Σ Pz =	0.00	lb
Σ Px =	0.00	lb
Σ Py =	95.00	lb
Σ Mx =	0.00	in-lb
Σ My =	0.00	in-lb
Σ Mz =	807.00	in-lb

Screw Reaction Summary:

Rz(max) =	0.00	lb
Rz(min) =	0.00	lb
Rh(max) =	106.43	lb

2007 NASPEC [AISI S100]

Project: 2030860-GARRETT COLLEGE CEPAC **Date:** 3/10/2021
Model: 20/S6 WALL STUD (ZONE 5)

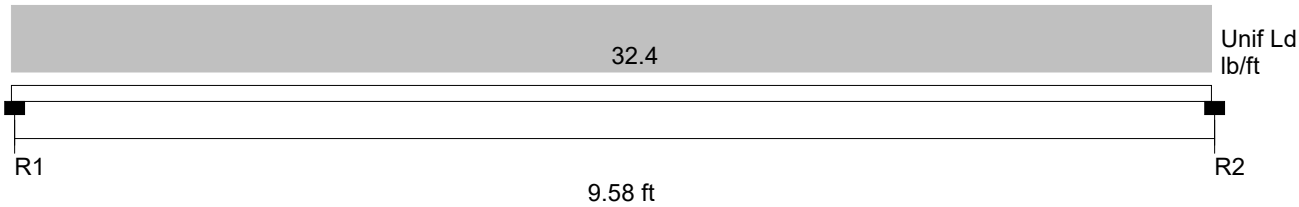

Section : 600S162-43 Single C Stud (X-X Axis) **Fy =** 33.0 ksi
Maxo = 1390.0 Ft-Lb **Moment of Inertia, I =** 2.316 in^4 **Va =** 1415.7 lb

Deflection limits: Ratio L/ 600

Loads have not been modified for strength checks
Loads have been multiplied by 0.70 for deflection calculations

Flexural and Deflection Check

Span	Mmax Ft-Lb	Mmax/ Maxo	Mpos Ft-Lb	Bracing (in)	Ma(Brc) Ft-Lb	Mpos/ Ma(Brc)	Deflection (in)	Deflection Ratio
Center Span	371.5	0.267	371.5	72	1003.0	0.370	0.063	L/1828
							Ireq'd = 0.760 in^4	

Distortional Buckling Check

Span	K-phi lb-in/in	Lm Brac (in)	Ma-d Ft-Lb	Mmax/ Ma-d
Center Span	0.00	115.0	1205.1	0.308

Combined Bending and Web Crippling

Reaction or Pt Load	Load P(lb)	Brng (in)	Pa (lb)	Pn (lb)	Mmax (Ft-Lb)	Intr. Value	Stiffen Req'd ?
R1	155.1	1.00	259.1	453.4	0.0	0.31	No
R2	155.1	1.00	259.1	453.4	0.0	0.31	No

Combined Bending and Shear

Reaction or Pt Load	Vmax (lb)	Mmax (Ft-Lb)	Va Factor	V/Va	M/Ma	Intr. Unstiffen	Intr. Stiffen
R1	155.1	0.0	1.00	0.11	0.00	0.11	NA
R2	155.1	0.0	1.00	0.11	0.00	0.11	NA

BASE MOMENT CONNECTION @ SECTION 21/S7

ASD DESIGN

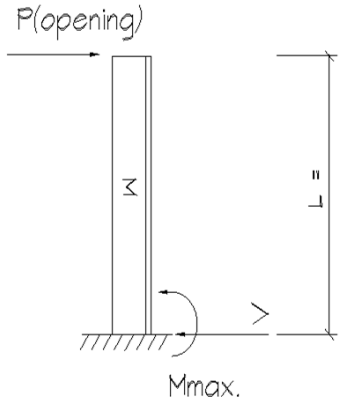

CANTILEVERED STUD ANALYSIS

	E_{CONN}	WL		
LATERAL LOAD =	**0.00**	**24.47**	PSF	W
P (OPENING) =	**0.00**	**420.00**	LB	P_o
TRACK DISTRIBUTION FACTOR =		**0.40**		D_f
STUD LENGTH =		**0.58**	FT	L
DEFLECTION CRITERIA = 2L/		**360**		D
UNIFORM LATERAL LOAD =	0.00	32.63	PLF	w
MAX. SHEAR = $wL + D_fP_o$ =	0.00	186.92	LB	V
MAX. MOMENT = $wL^2/2 + D_fP_oL$ =	0.00	1235.1	IN-LB	M_{max}
REQUIRED STIFFNESS = $D_fP_oL^3/3ED + wL^4/8ED$ =		0.0121	IN^4	I_{req}

USE: 1 600S162-43 16 " O.C. 33 KSI

ALLOWABLE MOMENT =	16607	IN-LB	M_{ax}	OK
ACTUAL STIFFNESS =	2.3160	IN^4	I_{act}	OK

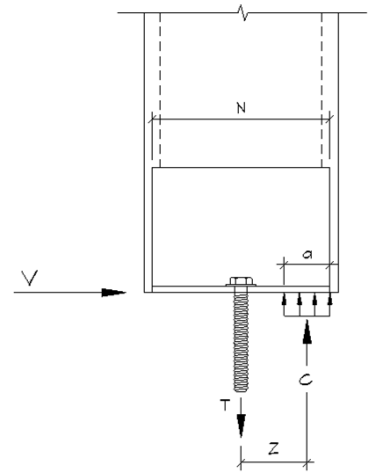

CLIP ANGLE TO CONCRETE CONNECTION

BEARING LENGTH =		0.20	IN	a
Z = (N/2)-(a/2) =		2.65	IN	Z
BOLT TENSION =	**0.00** =	461.07	LB	T
BOLT SHEAR =		186.92	LB	V
CONCRETE COMPRESSIVE STRENGTH =		**3500**	PSI	f'_c

USE: 1 3/8" x 3" LONG EXCEL STD. CONCRETE SCREW

	T_{all}	V_{all}
SPACING REDUCTION =	SEE CALC	SEE CALC
EDGE REDUCTION =	SEE CALC	SEE CALC

COMBINED SHEAR & TENSION INTERACTION = SEE CALC

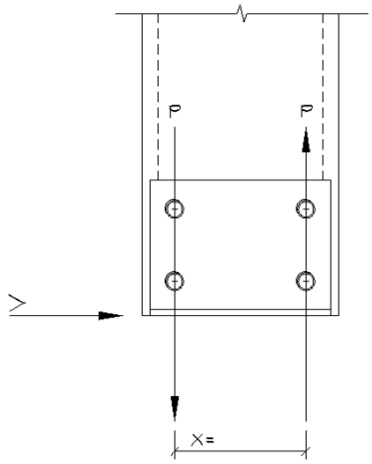

CLIP ANGLE TO STUD CONNECTION

MINIMUM SCREW SPACING =	**4.00**	IN	X	
P = Mmax/X =	308.78	LB	P	
TOTAL SHEAR = P+(V/2) =	402	LB	Vtot	OK

CLIP ANGLE DESIGN

USE: 1 2x4x97 x 5 1/2": 6 SCREWS LLV

USE: 6 #10-16 EXCEL STANDARD SCREW TOTAL

CLIP LENGTH =	5.50	IN	N	
CLIP WIDTH =	2.00	IN	B	
ALLOWABLE CLIP SHEAR =	1578	LB	V_{all}	OK
ALLOWABLE CLIP MOMENT =	2800	IN-LB	M_{all}	OK
ASSEMBLY DEFLECTION =	0.022	IN		

DEFLECTION MODIFIER = **0.70**

CONCRETE BEARING CALCULATIONS PER:	AISC STEEL DESIGN GUIDE #1 "BASE PLATE AND ANCHOR ROD DESIGN"
FASTENERS TO CONCRETE DESIGN VALUES PER:	MANUFACTURER CODE REPORTS
FASTENERS TO STUD DESIGN VALUES PER:	SEE DATA SHEEETS
CLIP ANGLE DESIGN VALUES PER:	SSMA PUBLISHED VALUES

© 2021 EXCEL ENGINEERING, INC.

POST INSTALLED CONCRETE ANCHOR DESIGN:

PER ACI 318-08 APPENDIX D

	D	Lr	S	L	SERVICE LEVEL E	SERVICE LEVEL W			SDC = B
ANCHOR SHEAR	0.0	0.0	0.0	0.0	0.0	186.9	LB	V	SHEAR BOTH DIRECTIONS
ANCHOR TENSION	0.0	0.0	0.0	0.0	0.0	461.1	LB	T	TENSION POSITIVE

		LOAD COMBINATIONS	SHEAR (V_{ua})		TENSION (N_{ua})		
		1.4D =	0.00	LB ¬	0.00	LB ¬	ASCE 2.3.2-1
		1.2D+1.6L+.5(Lr or S) =	0.00	LB ¬	0.00	LB ¬	ASCE 2.3.2-2
		1.2D+1.6Lr+0.5(L or 1.67W) =	77.88	LB	192.11	LB	ASCE 2.3.2-3
L= 50	PSF	1.2D+1.67W+0.5L+.05(Lr or S) =	311.54	LB	768.45	LB	ASCE 2.3.2-4
L= 50	PSF	1.2D+1.43E+0.5L+0.2S =	0.00	LB ¬	0.00	LB ¬	ASCE 2.3.2-5
L= 50	PSF	0.9D+1.67W =	311.54	LB	768.45	LB	ASCE 2.3.2-6
		0.9D+1.43E =	0.00	LB ¬	0.00	LB ¬	ASCE 2.3.2-7

CONCRETE =	3500	PSI	f'_c	EDGE DIST. TOWARDS LOAD =	3.00	IN	c_{a1}	≤	1.50	c_{min}	OK
CRACKED =	NO			EDGE DIST. OPPOSITE LOAD =	9.00	IN	c_{a2}	≤	1.50	c_{min}	OK
DUCTILE YIELD =	YES			SPACING A =	16.00	IN	s_{a1}	≤	2.50	s_{min}	OK
ANCHOR =	1	3/8" x 3" LONG EXCEL STD. CONCRETE SCREW		SPACING B =	16.00	IN	s_{a2}	≤	2.50	s_{min}	OK
FIXTURE =	50	KSI	F_y t = 0.1017 IN	THICKNESS =	6.00	IN	h_a	≤	3.50	h_{min}	OK

SHEAR DESIGN	NON-SEISMIC				
NOMINAL STEEL STRENGTH = ...	3465	LB	V_{sa}		
DESIGN STEEL STRENGTH INTERACTION = $V_{ua}/(\phi_{sa}*V_{sa})$ = ...	0.15	≤	1.00	OK	
NOMINAL CONCRETE BREAKOUT STRENGTH = $(A_{Vc}/A_{Vco})*\psi_{ed,V}*\psi_{c,V}*\psi_{h,V}*V_b$ = ...	2541	LB	V_{cb}		ACI 318 EQ.(D-21)
DESIGN CONCRETE BREAKOUT STRENGTH INTERACTION = $V_{ua}/(\phi_{cb}*V_{cb})$ = ...	0.18	≤	1.00	OK	
NOMINAL PRYOUT STRENGTH = $k_{cp}*N_{cp}$ = ...	1715	LB	V_{cp}		ACI 318 EQ.(D-30)
DESIGN PRYOUT STRENGTH INTERACTION = $V_{ua}/(\phi_{cp}*V_{cp})$ = ...	0.26	≤	1.00	OK	

TENSION DESIGN	NON-SEISMIC				
NOMINAL STEEL STRENGTH = ...	8730	LB	N_{sa}		
DESIGN STEEL STRENGTH INTERACTION = $N_{ua}/(\phi_{sa}*N_{sa})$ = ...	0.14	≤	1.00	OK	
NOMINAL CONCRETE BREAKOUT STRENGTH = $(A_{Nc}/A_{Nco})*\psi_{ed,Nx}*\psi_{ed,Ny}*\psi_{c,N}*\psi_{cp,N}*N_b$ = ...	1715	LB	N_{cb}		ACI 318 EQ.(D-4)
DESIGN CONCRETE BREAKOUT STRENGTH INTERACTION = $N_{ua}/(\phi_{cb}*N_{cb})$ = ...	0.69	≤	1.00	OK	
NOMINAL PULLOUT STRENGTH = $\psi_{c,P}*N_p$ = ...	3780	LB	N_{pn}		ACI 318 EQ.(D-14)
DESIGN PULLOUT STRENGTH INTERACTION = $N_{ua}/(\phi_{pn}*N_{pn})$ = ...	0.31	≤	1.00	OK	

INTERACTION DESIGN	NON-SEISMIC				
COMBINED TENSION AND SHEAR INTERACTION = $((N_{ua}/\phi*N_n)+(V_{ua}/\phi*V_n))/1.2$ = ...	0.79	≤	1.00	OK	ACI 318 EQ.(D-32)

ANCHOR PROPERTIES		STEEL STRENGTH SHEAR		STEEL STRENGTH TENSION		CONCRETE BREAKOUT SHEAR		CONCRETE BREAKOUT TENSION		CONCRETE PULLOUT SHEAR		CONCRETE PULLOUT TENSION		CONCRETE PRYOUT SHEAR		CONCRETE PRYOUT TENSION
d_0 =	0.375	ϕ_{sa} =	0.60	ϕ_{sa} =	0.65	ϕ_{cb} =	0.70	ϕ_{cb} =	0.65			ϕ_{pn} =	0.65	ϕ_{cp} =	0.70	
h_{nom} =	2.500					A_{Vc} =	40.5	A_{Nc} =	31.14			$\psi_{c,P}$ =	1.40	k_{cp} =	1.00	
h_{ef} =	1.860					A_{Vco} =	40.5	A_{Nco} =	31.14							
l_e =	1.860					$\psi_{ed,V}$ =	1.00	$\psi_{ed,N1}$ =	1.00							
k_c =	24					$\psi_{c,V}$ =	1.40	$\psi_{ed,N2}$ =	1.00							
c_{ac} =	6.300					$\psi_{h,V}$ =	1.00	$\psi_{c,N}$ =	1.00							
c_{max} =	2.790							$\psi_{cp,N}$ =	0.48							
s_{max} =	5.580					V_b =	1815.21	N_b =	3601.76							

DESIGN NOTES:

ANCHOR IS NOT SUBJECT TO ECCENTRIC TENSION OR ECCENTRIC SHEAR LOADING.

SUPPLEMENTARY REINFORCEMENT IS NOT PRESENT FOR PULLOUT OR PRYOUT STRENGTH (CONDITION B).

NO STAND-OFF, FIXTURE IN DIRECT CONTACT WITH CONCRETE BASE (i.e. NO GROUT PAD).

END-DISTANCE IS NOT A DESIGN CONCERN.

FASTENER DESIGN VALUES PER: MANUFACTURER CODE REPORTS

© 2021 EXCEL ENGINEERING, INC.

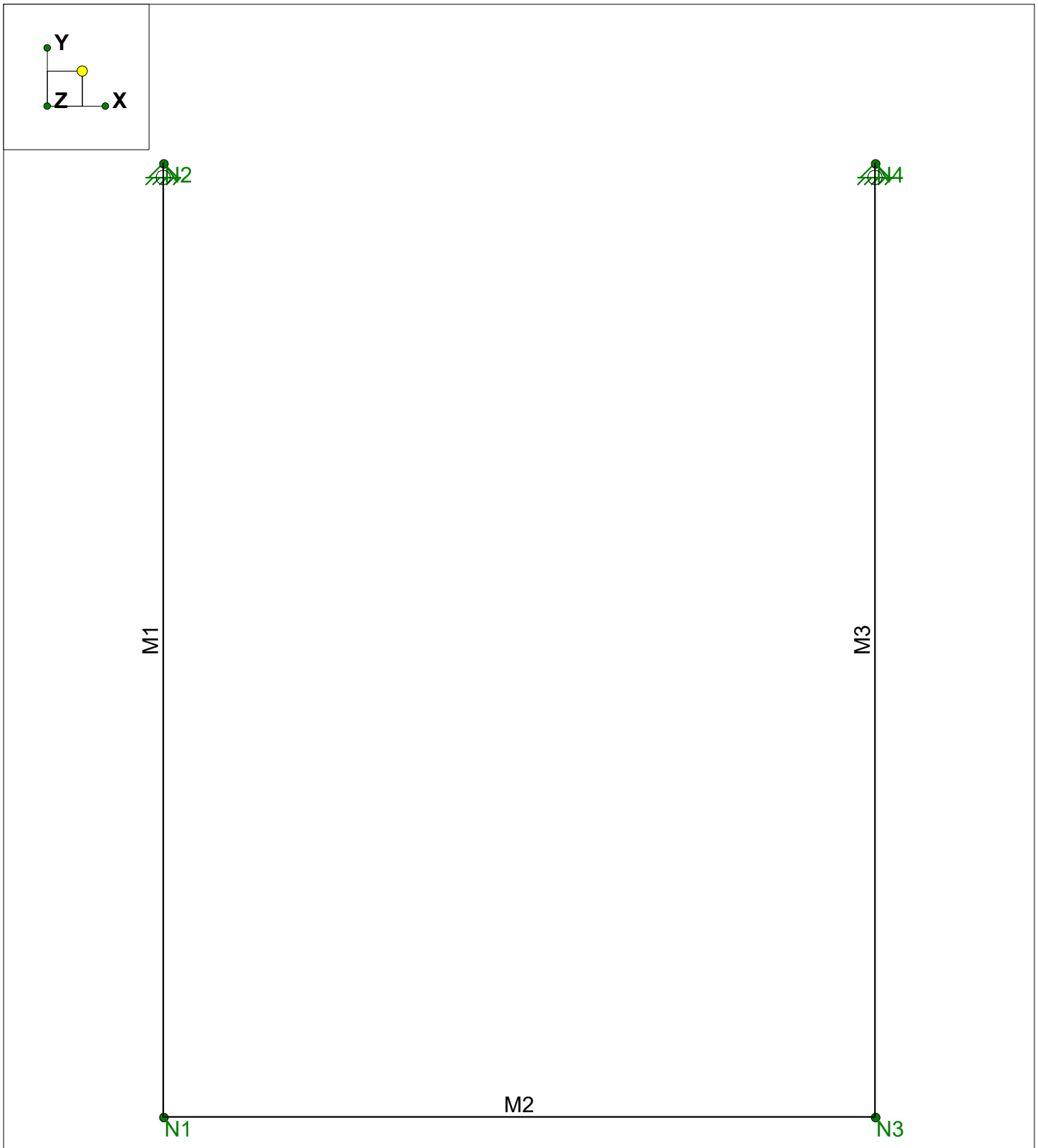

Envelope Only Solution

Excel Engineering, Inc.	SECTION 22/S7	SK - 1
ERIK JOHNSON		Mar 10, 2021 at 1:24 PM
2030860		22.S7 1 MODEL.r3d

Cold Formed Steel Properties

	Label	E [ksi]	G [ksi]	Nu	Therm (/1E5 F)	Density[k/ft^3]	Yield[ksi]	Fu[ksi]
1	A653-33	29500	11346	.3	.65	.49	33	45
2	A653-40	29500	11346	.3	.65	.49	40	52
3	A653-50	29500	11346	.3	.65	.49	50	65

Cold Formed Steel Section Sets

	Label	Shape	Type	Design List	Material	Design Rules	A [in2]	Iyy [in4]	Izz [in4]	J [in4]
1	C358-158-16	362S162-54	None	None	A653-50	Typical	.422	.154	.873	.000451
2	T358-114-16	362T125-54	None	None	A653-50	Typical	.346	.048	.723	.000369

Basic Load Cases

	BLC Description	Category	X Gravity	Y Gravity	Z Gravity	Joint	Point	Distributed	Area(Member)	Surface(Plate/Wall)
1	DL	DL						3		
2	+WLx	WL+X						2		
3	-WLx	WL-X						2		
4	+WLy	WL+Y						1		
5	-WLy	WL-Y						1		
6	SL	SL								

Member Distributed Loads (BLC 1 : DL)

	Member Label	Direction	Start Magnitude[lb/ft,F..	End Magnitude[lb/ft,...	Start Location[ft,%]	End Location[ft,%]
1	M1	Y	-13.33	-13.33	0	0
2	M2	Y	-13.33	-13.33	0	0
3	M3	Y	-13.33	-13.33	0	0

Member Distributed Loads (BLC 2 : +WLx)

	Member Label	Direction	Start Magnitude[lb/ft,F..	End Magnitude[lb/ft,...	Start Location[ft,%]	End Location[ft,%]
1	M3	X	36.06	36.06	0	0
2	M1	X	27.04	27.04	0	0

Member Distributed Loads (BLC 3 : -WLx)

	Member Label	Direction	Start Magnitude[lb/ft,F..	End Magnitude[lb/ft,...	Start Location[ft,%]	End Location[ft,%]
1	M1	X	-36.06	-36.06	0	0
2	M3	X	-27.04	-27.04	0	0

Member Distributed Loads (BLC 4 : +WLy)

	Member Label	Direction	Start Magnitude[lb/ft,F..	End Magnitude[lb/ft,...	Start Location[ft,%]	End Location[ft,%]
1	M2	Y	27.04	27.04	0	0

Member Distributed Loads (BLC 5 : -WLy)

	Member Label	Direction	Start Magnitude[lb/ft,F..	End Magnitude[lb/ft,...	Start Location[ft,%]	End Location[ft,%]
1	M2	Y	-36.06	-36.06	0	0

Load Combinations

	Description	Solve P...	S...	BLC	Fac...	BLC	Fac...	BLC	Fac...	BLC	Fac...	BLC	Fac...	BLC	Fac...	BLC	Fac...	BLC	Fac...	BLC	Fac...	BLC	Fac...
1	DL			1	1																		
2	+WLx					2	1																
3	-WLx							3	1														
4	+WLy									4	1												

Load Combinations (Continued)

	Description	Solve	P...	S...	BLC	Fac...	BLC	Fac...	BLC	Fac...	BLC	Fac...	BLC	Fac...	BLC	Fac...	BLC	Fac...	BLC	Fac...	BLC	Fac...	BLC	Fac...
5	-WLy												5	1										
6	SL														6	1								
7	DL	Yes			1	1																		
8	DL+WLx	Yes			1	1	2	1																
9	DL-WLx	Yes			1	1			3	1														
10	.9DLact+WLy	Yes			1	.54					4	1												
11	DL-WLy	Yes			1	1							5	1										
12	DL+SL	Yes			1	1									6	1								
13	DL+WLx-WLy	Yes			1	1	2	1					5	1										
14	DL-WLx-WLy	Yes			1	1			3	1			5	1										
15	DL+WLx+WLy	Yes			1	1	2	1			4	1												
16	DL-WLx-WLy	Yes			1	1			3	1	4	1												
17	.9DLact+WLx+...	Yes			1	.54	2	1			4	1												
18	.9DLact-WLx+...	Yes			1	.54			3	1	4	1												

Envelope AISI S100-07: ASD Cold Formed Steel Code Checks

	Member	Shape	Code Check	Loc[ft]	LC	Shear Check	Loc[ft]	Dir	LC	Pn/Om...	Tn/Om...	Mnyy/...	Mnzz/...	Cb	Cmyy	Cmzz	Eqn
1	M1	250S162-43	.026	0	13	.018	.67	y	18	4931.5...	5710.7...	146.228	397.844	1.361	.6	1	C5.1....
2	M2	250S162-43	.037	.5	14	.032	.5	y	14	4968.7...	5710.7...	183.297	397.868	2.165	.6	.85	C3.3....
3	M3	250S162-43	.026	0	14	.018	.67	y	17	4931.5...	5710.7...	146.228	397.844	1.361	.6	1	C5.1....

Envelope Joint Reactions

	Joint		X [lb]	LC	Y [lb]	LC	Z [lb]	LC	MX [lb-ft]	LC	MY [lb-ft]	LC	MZ [lb-ft]	LC
1	N2	max	22.719	18	49.604	13	0	18	0	18	0	18	0	18
2		min	-20.497	13	-28.463	18	0	7	0	7	0	7	0	7
3	N4	max	20.497	14	49.604	14	0	18	0	18	0	18	0	18
4		min	-22.719	17	-28.463	17	0	7	0	7	0	7	0	7
5	N1	max	0	18	0	18	0	18	0	18	0	18	0	18
6		min	0	7	0	7	0	7	0	7	0	7	0	7
7	Totals:	max	42.277	18	42.557	14	0	18						
8		min	-42.277	8	-.275	10	0	7						

Beam: ***M2***

Shape: **250S162-43**
Material: **A653-33**
Length: **.5 ft**
I Joint: **N1**
J Joint: **N3**
Envelope
Code Check: **0.037 (LC 14)**
Report Based On 97 Sections

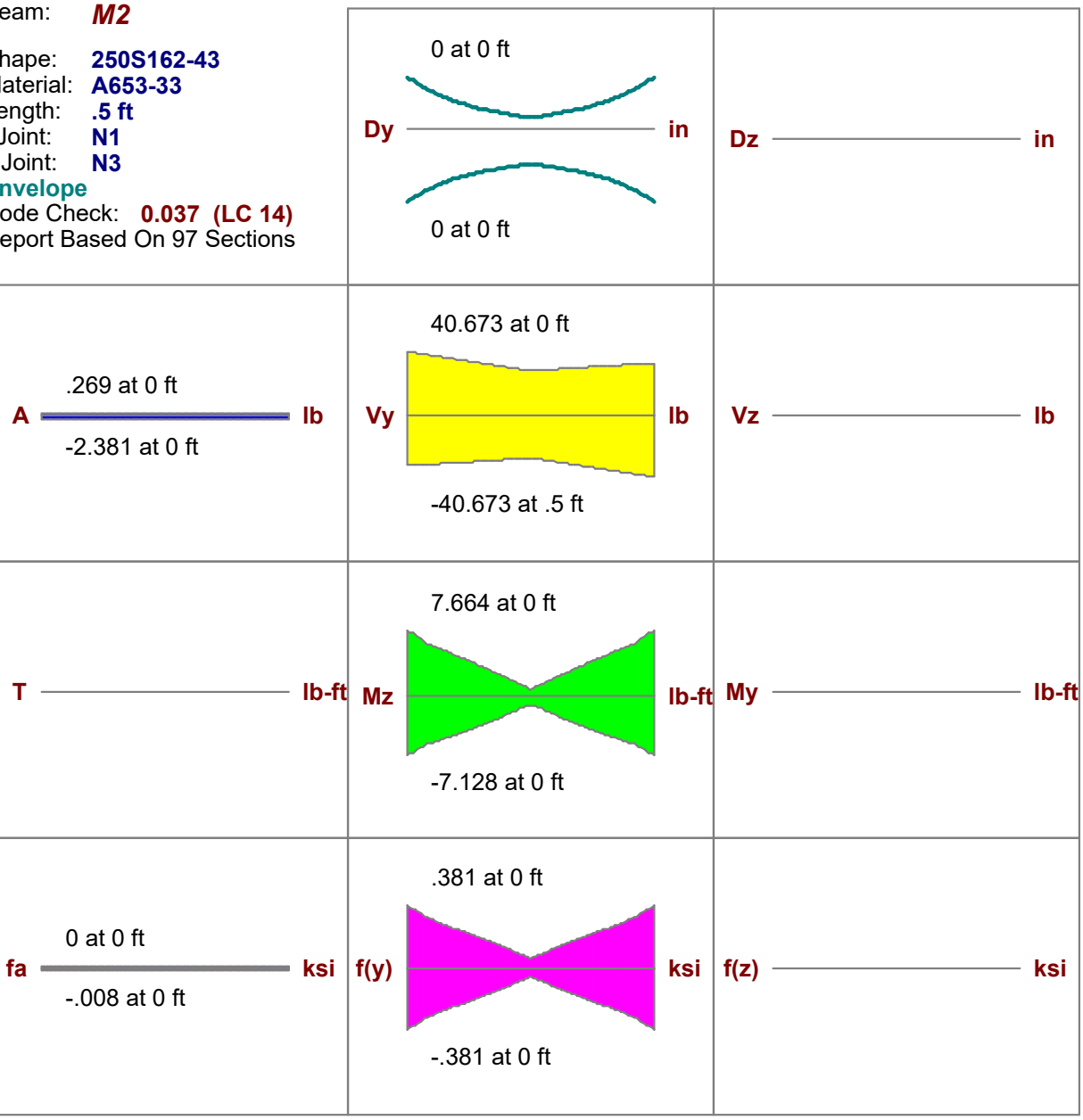

AISI S100-07: ASD Code Check

Max Bending Check	**0.037 (LC 14)**	Max Shear Check	**0.032 (y) (LC 14)**	Max Defl Ratio	**L/10000**
Location	**.5 ft**	Location	**.5 ft**	Location	**0 ft**
Equation	**C3.3.1-1**			Span	**NA**
Gov.∅ Equation	**C3.1.4**				

R (D6.1.1) **Not Used**

			y-y	z-z		
Fy	**33 ksi**	Cm	**.6**	**.85**	A eff. (Fy)	**.274 in^2**
Pn/Ω	**4968.779 lb**	Lb	**.5 ft**	**.5 ft**	A eff. (Fn)	**.274 in^2**
Tn/Ω	**5710.778 lb**	KL/r	**9.681**	**5.869**	Iy eff.	**.111 in^4**
Mny/Ω	**183.297 lb-ft**				Sy eff. (L)	**.177 in^3**
Mnz/Ω	**397.868 lb-ft**	L Comp Flange	**.5 ft**		Sy eff. (R)	**.111 in^3**
Vny/Ω	**1265.464 lb**	L-torque	**.5 ft**		Iz eff.	**.302 in^4**
Vnz/Ω	**1554.232 lb**				Sz eff. (T)	**.242 in^3**
Cb	**2.165**				Sz eff. (B)	**.242 in^3**

SCREW GROUP ANALYSIS

Using the Elastic Method for up to 25 Total Screws

Project Name:		Client:			
Project No.:		Prep. By:		Date:	

Input Data:

Number of Screws, Nb = 4

Screw Coordinates:

	Xo (in.)	Yo (in.)
#1:	0.000	0.000
#2:	1.000	0.000
#3:	0.000	1.000
#4:	1.000	1.000

Results:

Screw Reactions (lbs)

	Axial Rz	Shear Rh
#1:	0.00	45.80
#2:	0.00	59.65
#3:	0.00	41.73
#4:	0.00	56.58

SCREW GROUP PLOT

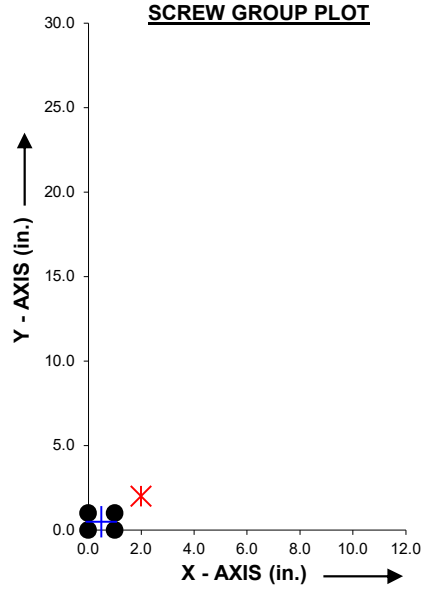

Screw Group Properties:

Xc =	0.500	in.
Yc =	0.500	in.
Ix =	1.00	in.^2
Iy =	1.00	in.^2
J =	2.00	in.^2
Ixy =	0.00	in.^2
θ =	0.000	deg.

No. of Load Points, N = 1

Load Point Data: Point #1

X-Coordinate (in.) =	2.000			
Y-Coordinate (in.) =	2.000			
Z-Coordinate (in.) =	0.000			
Axial Load, Pz (lb) =	0.00			
Shear Load, Px (lb) =	10.00			
Shear Load, Py (lb) =	41.00			
Moment, Mx (in-lb) =	0.00			
Moment, My (in-lb) =	0.00			
Moment, Mz (in-lb) =	96.00			

Σ Loads @ C.G. of Screw Group:

Σ Pz =	0.00	lb
Σ Px =	10.00	lb
Σ Py =	41.00	lb
Σ Mx =	0.00	in-lb
Σ My =	0.00	in-lb
Σ Mz =	142.50	in-lb

Screw Reaction Summary:

Rz(max) =	0.00	lb
Rz(min) =	0.00	lb
Rh(max) =	59.65	lb

EXCEL ARCHITECTS • ENGINEERS • SURVEYORS	100 CAMELOT DRIVE FOND DU LAC, WI 54935 P: 920|926|9800 F: 920|926|9801 www.excelengineer.com	PROJECT:	GARRETT COLLEGE CEPAC	PAGE:	21
		LOCATION:	MCHENRY, MD		
		CLIENT:	LEONARD S. FIORE	DATE:	03/10/21
		PROJECT #:	2030860	ENGR:	EJ

WIND LOAD
SERVICE LEVEL

ASD DESIGN

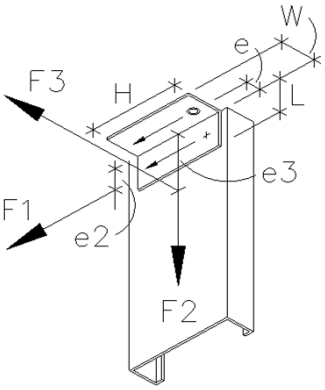

STUD: **VERTICAL**
CLIP: **TOP**

DETAIL 23/D2

	F1 WL	F2 WL	F3 WL
13/S4	62	0	0

INPUT VARIABLES

F1 MAX. (LB) =	**62.00**	
F2 MAX. (LB) =	**0.00**	
F3 MAX. (LB) =	**0.00**	
W (IN) =	**2.00**	
L (IN) =	**6.00**	
H (IN) =	**4.00**	
e (IN) =	**0.75**	
e2 (IN) =	**3.00**	
e3 (IN) =	N/A	
BEARING LENGTH AGAINST STRUCTURE "a" (IN) =	**4.00**	
GAP BETWEEN STUD AND STRUCTURE "b" (IN) =	**4.00**	
COUPLE ARM TO RESIST F1*e "Lm" (IN) =	**1.00**	
COUPLE ARM TO RESIST F1*e2 "Lm2" (IN) =	**1.50**	
Fy CLIP ANGLE (KSI) =	**50**	
Fu CLIP ANGLE (KSI) =	65	
FASTENER TO STEEL SHANK DIA.(IN) d =	0.1570	
FASTENER TO STEEL HEAD DIA. (IN) dw =	0.3150	
Tallowable FASTENER @ STEEL (LB) =	FASTENER	CLIP
	562	579
Vallowable FASTENER @ STEEL (LB) =	FASTENER	CLIP
	535	902
Tallowable FASTENER @ STUD (LB) =	FASTENER	STUD
	309	109
Vallowable FASTENER @ STUD (LB) =	FASTENER	STUD
	324	263
STRESS INCREASE	**1.000**	
SEISMIC AMPLIFICATION & RESPONSE FACTOR	**1.000**	

CLIP ANGLE DESIGN:

BENDING F1	L-LEG BENDING M1 =		186.00	IN-LB	
BENDING F2	W-LEG BENDING M2 =		0.00	IN-LB	
BENDING F3	L&W-LEG BENDING M3 =		0.00	IN-LB	
COMP. F2	L-LEG COMPRESSION C2 =		0.00	LB	
TENSION F2	L-LEG TENSION T2 =		0.00	LB	
SHEAR F1	L&W LEG SHEAR =		62.00	LB	
THICKNESS OF L-LEG CLIP ANGLE REQ'D. =			0.0023	IN	
THICKNESS OF W-LEG CLIP ANGLE REQ'D. =			0.0000	IN	
CLIP REQUIRED =			16 GA.		
THICKNESS PROVIDED =		**16 GA.**	0.0566	IN	OK
L-LEG ALLOWABLE COMP. STRENGTH =			342.95	LB	OK
L&W-LEG ALLOWABLE SHEAR STRENGTH =			3371.56	LB	OK

USE: 1 2" x 6" x 16 GA. x 4" LONG

FASTENER DESIGN TO STEEL: THICKNESS: 1/4" 36 KSI MIN.

MAX. FASTENER PRYING ACTION F1
PRYING FORCE @ TOP FASTENER (LB) = 124.00

MAX. FASTENER PRYING ACTION F2
PRYING FORCE @ FASTENER CENTERLINE (LB) = 0.00

MAX. FASTENER PRYING ACTION F3
PRYING FORCE @ FASTENER CENTERLINE (LB) = 0.00

MAX. FASTENER SHEAR RESULTANT F1 & F3
SHEAR RESULTANT @ TOP FASTENER (LB) = 77.50

NUMBER OF FASTENERS REQUIRED:

$$\frac{\text{PRYING ACTION F1}}{\text{Tall FASTENER @ STEEL}} + \frac{\text{PRYING ACTION F2}}{\text{Tall FASTENER @ STEEL}} + \frac{\text{PRYING ACTION F3}}{\text{Tall FASTENER @ STEEL}} + \frac{\text{SHEAR RESULTANT F1 \& F3}}{\text{Vall FASTENER @ STEEL}} = 0.4$$

USE: 2 .157" EXCEL STANDARD PDF MINIMUM # PDF'S PER FASTENER ROW 1

FASTENER DESIGN TO STUD: STUD: 600S162-43 33 KSI MIN.

MAX. FASTENER SECONDARY PRYING ACTION F2
PRYING FORCE @ FASTENER CENTERLINE (LB) = 0.00

MAX. FASTENER SHEAR RESULTANT F1 & F2
SHEAR RESULTANT @ FASTENER CENTERLINE (LB) = 62.00

NUMBER OF FASTENERS REQUIRED:

$$\frac{\text{SECONDARY PRYING ACTION F2}}{\text{Tall FASTENER @ STUD}} + \frac{\text{SHEAR RESULTANT F1 \& F2}}{\text{Vall FASTENER @ STUD}} = 0.2$$

USE: 2 #10-16 EXCEL STANDARD SCREW MINIMUM, PER CLIP

REFERENCE: "DESIGN OF CLIP ANGLES FOR TENSION" - NEWSLETTER FOR THE LIGHT GAUGE STEEL ENGINEERS ASSOCIATION, SPRING 2002

FASTENERS TO STEEL DESIGN VALUES PER: SEE DATA SHEEETS

FASTENERS TO STUD DESIGN VALUES PER: SEE DATA SHEEETS

© 2021 EXCEL ENGINEERING, INC.

EXCEL ARCHITECTS • ENGINEERS • SURVEYORS	100 CAMELOT DRIVE	PROJECT:	GARRETT COLLEGE CEPAC	PAGE:	22
	FOND DU LAC, WI 54935	LOCATION:	MCHENRY, MD		
	P: 920|926|9800 F: 920|926|9801	CLIENT:	LEONARD S. FIORE	DATE:	03/09/21
	www.excelengineer.com	PROJECT #:	2030860	ENGR:	EJ

WIND LOAD
SERVICE LEVEL

ASD DESIGN

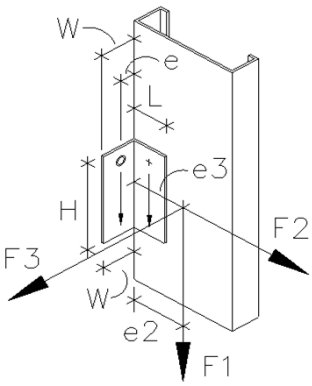

STUD: **VERTICAL**
CLIP: **SIDE**

DETAIL 30/D3

	F1		F2		F3	
	DL	WL	DL	WL	DL	WL
3/S1	0	0	0	321	0	0

INPUT VARIABLES

F1 MAX. (LB) =	**0.00**	
F2 MAX. (LB) =	**321.00**	
F3 MAX. (LB) =	**0.00**	
W (IN) =	1.500	
L (IN) =	5.500	
H (IN) =	4.000	
e (IN) =	0.75	
e2 (IN) =	N/A	
e3 (IN) =	N/A	
BEARING LENGTH AGAINST STRUCTURE "a" (IN) =	**4.00**	
GAP BETWEEN STUD AND STRUCTURE "b" (IN) =	**1.00**	
COUPLE ARM TO RESIST F1*e "Lm" (IN) =	2.00	
COUPLE ARM TO RESIST F1*e2 "Lm2" (IN) =	2.00	
MINIMUM VSC Fy (KSI) =	40	
MINIMUM VSC Fu (KSI) =	55	
MINIMUM FASTENER SHANK DIA. (IN) d =	0.3750	
MINIMUM FASTENER HEAD DIA. (IN) dw =	0.5625	
Tallowable FASTENER @ CONCRETE (LB) =	FASTENER	CLIP
	SEE CALC	2627
Vallowable FASTENER @ CONCRETE (LB) =	FASTENER	CLIP
	SEE CALC	3502
STRESS INCREASE	**1.000**	
SEISMIC AMPLIFICATION & RESPONSE FACTOR	**1.000**	

CLIP ANGLE DESIGN:

BENDING F1		
L-LEG BENDING M1 =	0.00	IN-LB
BENDING F3		
L&W-LEG BENDING M3 =	0.00	IN-LB
TENSION F2		
L-LEG TENSION T2 =	321.00	LB
ALLOWABLE STRENGTH, F1 DIRECTION =	0	LB
ALLOWABLE STRENGTH, F2 DIRECTION - PRESSURE =	560	LB
ALLOWABLE STRENGTH, F2 DIRECTION - SUCTION =	560	LB
ALLOWABLE STRENGTH, F3 DIRECTION =	0	LB

USE:	**1**	**CLARKDIETRICH FCSC 5.5(68) - 3 SCREWS**	OK
		MARINO/WARE WSC600 - 2 SCREWS	OK
		SIMPSON SCB45.5 - 2 SCREWS	OK
		TSN VertiClip SLB600 - 2 SCREWS	OK

FASTENER DESIGN TO CONCRETE:

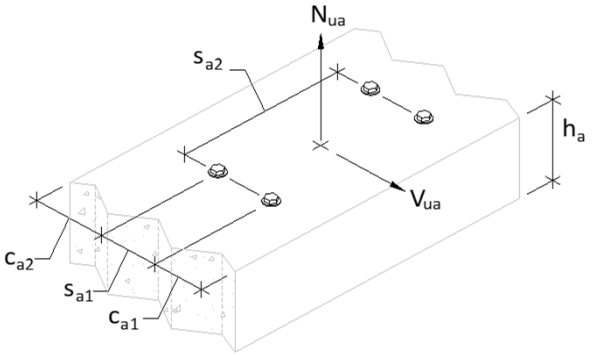

EDGE DISTANCE TOWARDS LOAD =	**3.00**	IN	c_{a1}	**OK**		
EDGE DISTANCE OPPOSITE LOAD =	**9.00**	IN	c_{a2}	**OK**		
SPACING BETWEEN ANCHORS =	**0.00**	IN	s_{a1}	**OK**		
SPACING BETWEEN GROUPS =	**0.00**	IN	s_{a2}	**OK**		
THICKNESS =	**6.00**	IN	h_a	**OK**		
CONCRETE STRENGTH =	**3000**	PSI	f'_c	1.00	λ_a	**NORMAL WT**
CRACKED CONCRETE =	**NO**					
DUCTILE YIELD =	**YES**					
COMPONENT OVERSTRENGTH FACTOR =	**1.0**		Ω_o			ASCE T13.5-1

			INTERACTION SUMMARY							
			V_{sa}	V_{cb}	V_{cp}	N_{sa}	N_{cb}	N_{pn}	COMBINED	CODE REPORT
USE:	**1**	**3/8" x 3" LONG KWIK HUS-EZ**	0.00	0.00	0.00	0.16	0.49	0.00	0.49	HILTI ICC-ES ESR-3027
		3/8" x 3" LONG TITEN HD	0.00	0.00	0.00	0.15	0.53	0.56	0.56	SIMPSON ICC-ES ESR-2713
		3/8" x 2 1/2" LONG TAPCON+	0.00	0.00	0.00	0.13	0.70	0.00	0.70	ITW RED HEAD ICC-ES ESR-3699

PER CLIP

FASTENER DESIGN TO STUD: STUD: 600S162-43 33 KSI MIN.

ANCHOR PROPERTIES	d_o	h_{nom}	h_{ef}	h_{min}	c_{ac}	$c_{a,max}$	c_{min}	$s_{a,max}$	s_{min}	l_e	k_c	k_{cp}	$\psi_{c,V}$	$\psi_{c,P}$	ϕ_{sav}	ϕ_{sat}	ϕ_{cbv}	ϕ_{cbt}	$\psi_{c,N}$	ϕ_{pn}	n	ϕ_{cp}
3/8" x 3" LONG KWIK HUS-EZ	0.375	2.500	1.860	4.00	2.92	2.79	1.50	5.58	3.00	1.86	24	1.00	1.40	1.00	0.60	0.65	0.70	0.65	1.00	0.65	0.50	0.70
3/8" x 3" LONG TITEN HD	0.375	2.500	1.770	4.00	2.69	2.66	1.75	5.31	3.00	1.77	24	1.00	1.40	1.00	0.60	0.65	0.70	0.65	1.00	0.65	0.50	0.70
3/8" x 2 1/2" LONG TAPCON+	0.375	2.500	1.780	4.00	4.50	2.67	1.50	5.34	3.00	1.78	27	1.00	1.40	1.00	0.60	0.65	0.70	0.65	1.00	0.65	0.12	0.70

© 2021 EXCEL ENGINEERING, INC.

EXCEL ARCHITECTS • ENGINEERS • SURVEYORS	100 CAMELOT DRIVE	PROJECT:	GARRETT COLLEGE CEPAC	PAGE:	23
	FOND DU LAC, WI 54935	LOCATION:	MCHENRY, MD		
	P: 920|926|9800 F: 920|926|9801	CLIENT:	LEONARD S. FIORE	DATE:	03/09/21
	www.excelengineer.com	PROJECT NO:	2030860	ENGR:	EJ

POST-INSTALLED CONCRETE ANCHOR DESIGN: DETAIL 30/D3 SHEAR BOTH DIRECTIONS

3/S1

FACTORED & AMPLIFIED CONNECTION FORCES (LB)																						COMBINED PER ANCHOR	
	F1			F1 PRY			F2			F2 PRY			F3			F3 PRY			F1/F3 Result				
	DL	WL	TL	DL	WL	TL	DL	WL	TL	DL	WL	TL	DL	WL	TL	DL	WL	TL	DL	WL	TL	V_{ua}	N_{ua}
1.4D	0	0	0	0	0	0	0	0	0	0	0	0	0	0	0	0	0	0	0	0	0	0	0
1.2D+1.67W	0	0	0	0	0	0	0	535	535	0	1070	1070	0	0	0	0	0	0	0	0	0	0	1070
1.2D+1.43E	0	0	0	0	0	0	0	0	0	0	0	0	0	0	0	0	0	0	0	0	0	0	0
1.4D	0	0	0	0	0	0	0	0	0	0	0	0	0	0	0	0	0	0	0	0	0	0	0
1.2D+1.67W	0	0	0	0	0	0	0	0	0	0	0	0	0	0	0	0	0	0	0	0	0	0	0
1.2D+1.43E	0	0	0	0	0	0	0	0	0	0	0	0	0	0	0	0	0	0	0	0	0	0	0
1.4D	0	0	0	0	0	0	0	0	0	0	0	0	0	0	0	0	0	0	0	0	0	0	0
1.2D+1.67W	0	0	0	0	0	0	0	0	0	0	0	0	0	0	0	0	0	0	0	0	0	0	0
1.2D+1.43E	0	0	0	0	0	0	0	0	0	0	0	0	0	0	0	0	0	0	0	0	0	0	0
1.4D	0	0	0	0	0	0	0	0	0	0	0	0	0	0	0	0	0	0	0	0	0	0	0
1.2D+1.67W	0	0	0	0	0	0	0	0	0	0	0	0	0	0	0	0	0	0	0	0	0	0	0
1.2D+1.43E	0	0	0	0	0	0	0	0	0	0	0	0	0	0	0	0	0	0	0	0	0	0	0
1.4D	0	0	0	0	0	0	0	0	0	0	0	0	0	0	0	0	0	0	0	0	0	0	0
1.2D+1.67W	0	0	0	0	0	0	0	0	0	0	0	0	0	0	0	0	0	0	0	0	0	0	0
1.2D+1.43E	0	0	0	0	0	0	0	0	0	0	0	0	0	0	0	0	0	0	0	0	0	0	0
1.4D	0	0	0	0	0	0	0	0	0	0	0	0	0	0	0	0	0	0	0	0	0	0	0
1.2D+1.67W	0	0	0	0	0	0	0	0	0	0	0	0	0	0	0	0	0	0	0	0	0	0	0
1.2D+1.43E	0	0	0	0	0	0	0	0	0	0	0	0	0	0	0	0	0	0	0	0	0	0	0
1.4D	0	0	0	0	0	0	0	0	0	0	0	0	0	0	0	0	0	0	0	0	0	0	0
1.2D+1.67W	0	0	0	0	0	0	0	0	0	0	0	0	0	0	0	0	0	0	0	0	0	0	0
1.2D+1.43E	0	0	0	0	0	0	0	0	0	0	0	0	0	0	0	0	0	0	0	0	0	0	0

	3/8" x 3" LONG KWIK HUS-EZ	3/8" x 3" LONG TITEN HD	3/8" x 2 1/2" LONG TAPCON+				
SHEAR DESIGN	NON-SEISMIC	NON-SEISMIC	NON-SEISMIC				ACI 318-14
NOMINAL STEEL STRENGTH =	5185	4460	3621	LB	V_{sa}		17.5.1
STEEL STRENGTH INTERACTION =	0.00	0.00	0.00	≤	1.00	**OK**	17.3.1.1
NOMINAL CONCRETE BREAKOUT STRENGTH =	2353	2330	2332	LB	V_{cb}		17.5.2.1a
PROJECTED GROUP CONCRETE FAILURE AREA =	40.50	40.50	40.50	IN^2	A_{Vc}		R17.5.2.1b
SINGLE ANCHOR NON-LIMITED CONCRETE FAILURE A	40.50	40.50	40.50	IN^2	A_{Vco}		17.5.2.1c
EDGE EFFECT SHEAR MODIFIER =	1.00	1.00	1.00		$\psi_{ed,V}$		17.5.2.6
EMBEDMENT SHEAR MODIFIER =	1.00	1.00	1.00		$\psi_{h,V}$		17.5.2.8
BASIC CONCRETE BREAKOUT STRENGTH =	1681	1664	1666	LB	V_b		17.5.2.2a
CONCRETE BREAKOUT STRENGTH INTERACTION =	0.00	0.00	0.00	≤	1.00	**OK**	17.3.1.1
NOMINAL PRYOUT STRENGTH =	3335	3096	2341	LB	V_{cp}		17.5.3.1a
PRYOUT STRENGTH INTERACTION =	0.00	0.00	0.00	≤	1.00	**OK**	17.3.1.1
TENSION DESIGN	NON-SEISMIC	NON-SEISMIC	NON-SEISMIC				
NOMINAL STEEL STRENGTH =	10335	10890	12250	LB	N_{sa}		17.4.1
STEEL STRENGTH INTERACTION =	0.16	0.15	0.13	≤	1.00	**OK**	17.3.1.1
NOMINAL CONCRETE BREAKOUT STRENGTH =	3335	3096	2341	LB	N_{cb}		17.4.2.1a
PROJECTED CONCRETE FAILURE AREA =	31.14	28.20	28.52	IN^2	A_{Nc}		R17.4.2.1
NON-LIMITED CONCRETE FAILURE AREA =	31.14	28.20	28.52	IN^2	A_{Nco}		17.4.2.1c
EDGE EFFECT TENSION MODIFIER =	1.00	1.00	1.00		$\psi_{ed,N1}$		17.4.2.5
EDGE EFFECT TENSION MODIFIER =	1.00	1.00	1.00		$\psi_{ed,N2}$		17.4.2.5
SPLITTING TENSILE STRESS MODIFER =	1.00	1.00	0.67		$\psi_{cp,N}$		17.4.2.7
BASIC CONCRETE BREAKOUT STRENGTH =	3335	3096	3512	LB	N_b		17.4.2.2a
CONCRETE BREAKOUT STRENGTH INTERACTION =	0.49	0.53	0.70	≤	1.00	**OK**	17.3.1.1
NOMINAL PULLOUT STRENGTH =	N/A	2958	N/A	LB	N_{pn}		17.4.3.1
STRENGTH ADJUSTMENT FACTOR =	1.10	1.10	1.02		$\beta_{c,P}$		17.4.3.2
PULLOUT STRENGTH INTERACTION =	**N/A**	0.56	**N/A**	≤	1.00	**OK**	17.3.1.1
INTERACTION DESIGN	NON-SEISMIC	NON-SEISMIC	NON-SEISMIC				
COMBINED TENSION AND SHEAR INTERACTION =	0.49	0.56	0.70	≤	1.00	**OK**	17.6

ANCHORS ARE DESIGNED FOR THE MAXIMUM SEISMIC SHEAR FORCE CALCULATED WITH OVERSTRENGTH FACTOR Ω_o 17.2.3.5.3 (c)

ANCHORS ARE DESIGNED FOR THE MAXIMUM SEISMIC TENSION FORCE CALCULATED WITH OVERSTRENGTH FACTOR Ω_o 17.2.3.4.3 (d)

© 2021 EXCEL ENGINEERING, INC.

EXCEL ARCHITECTS • ENGINEERS • SURVEYORS	100 CAMELOT DRIVE FOND DU LAC, WI 54935 P: 920|926|9800 F: 920|926|9801 www.excelengineer.com	PROJECT:	GARRETT COLLEGE CEPAC	PAGE:	24
		LOCATION:	MCHENRY, MD		
		CLIENT:	LEONARD S. FIORE	DATE:	03/10/21
		PROJECT #:	2030860	ENGR:	EJ

WIND LOAD
SERVICE LEVEL

ASD DESIGN

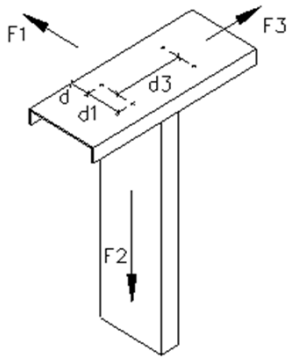

STUD: **VERTICAL**
TRACK: **TOP**

DETAIL 37/D3

	F1 WL	F2 WL	F3 WL
20/S6	156	0	0

INPUT VARIABLES

F1 MAX. (LB) =	**156.00**	
F2 MAX. (LB) =	**0.00**	
F3 MAX. (LB) =	**0.00**	
TRACK WEB (IN) =	6.00	
TRACK LEG (IN) =	3.00	
TRACK EFFECTIVE LENGTH (IN) =	13.67	
TRACK THICKNESS (IN) =	0.0566	
d (IN) =	**1.00**	
d1 (IN) =	**4.00**	
d3 (IN) =	**16.00**	
GAP BETWEEN STUD AND TRACK "e" (IN) =	**1.00**	
FASTENER TO STEEL SHANK DIA. (IN) d =	0.1570	
FASTENER TO STEEL HEAD DIA. (IN) dw =	0.3150	
CONNECTION TYPE	**WALL**	
Tallowable FASTENER @ STEEL (LB) =	FASTENER	TRACK
	562	579
Vallowable FASTENER @ STEEL (LB) =	FASTENER	TRACK
	535	902
Tallowable FASTENER @ STUD (LB) =	FASTENER	TRACK
	109	406
Vallowable FASTENER @ STUD (LB) =	FASTENER	TRACK
	324	263
STRESS INCREASE	**1.000**	
SEISMIC AMPLIFICATION & RESPONSE FACTOR	**1.000**	

TRACK DESIGN: SLIP TRACK

F1 BENDING: EACH TRACK LEG

ALLOWABLE LOAD = 195.49 LB OK

F3 COMPRESSION: EFFECTIVE TRACK LENGTH

ALLOWABLE LOAD = 7942.52 LB OK

0.00

F1 SHEAR: TRACK WEB

TRACK WEB ALLOWABLE SHEAR STRENGTH (LBS.) = 2689.74 LB OK

USE: 1 LEG 600T300-54 50 KSI MIN.

FASTENER DESIGN TO STEEL: THICKNESS: 1/4" 36 KSI MIN.

MAX. FASTENER PRYING ACTION F1

PRYING FORCE @ TOP FASTENER (LBS.) = 39.00

MAX. FASTENER PRYING ACTION F2

PRYING FORCE @ FASTENER CENTERLINE (LBS.) = 0.00

MAX. FASTENER TENSION RESULTANT F2

RESULTANT @ FASTENER CENTERLINE (LBS.) = 0.00

MAX. FASTENER SHEAR RESULTANT F1 & F3

RESULTANT @ FASTENER CENTERLINE (LBS.) = 156.00

NUMBER OF FASTENERS REQUIRED:

$$\frac{\text{PRYING ACTION F1}}{\text{Tall FASTENER @ STEEL}} + \frac{\text{PRYING ACTION F2}}{\text{Tall FASTENER @ STEEL}} + \frac{\text{TENSION RESULTANT F2}}{\text{Tall FASTENER @ STEEL}} + \frac{\text{SHEAR RESULTANT F1 \& F3}}{\text{Vall FASTENER @ STEEL}} = 0.4$$

USE: 2 .157" EXCEL STANDARD PDF MINIMUM # PDF's PER FASTENER ROW 2

FASTENER DESIGN TO STUD: STUD: 1 600S162-43 33 KSI MIN. @ 16 " O.C.

MAX. FASTENER SHEAR RESULTANT F2 & F3

RESULTANT @ FASTENER CENTERLINE (LBS.) = 0.00

MAX. FASTENER "LEFTOVER" TENSION RESULTANT F1

RESULTANT @ FASTENER CENTERLINE (LBS.) = 0.00

NUMBER OF FASTENERS REQUIRED, STUD TO TRACK (PER TRACK LEG):

$$\frac{\text{SHEAR RESULTANT F2 \& F3}}{\text{Vall FASTENER @ STUD}} + \frac{\text{TENSION RESULTANT F1}}{\text{Tall FASTENER @ STUD}} = 0.0$$

USE: 1 #10-16 EXCEL STANDARD SCREW MINIMUM, EACH TRACK LEG

FASTENERS TO STEEL DESIGN VALUES PER: SEE DATA SHEEETS

FASTENERS TO STUD DESIGN VALUES PER: SEE DATA SHEEETS

© 2021 EXCEL ENGINEERING, INC.

EXCEL ARCHITECTS • ENGINEERS • SURVEYORS	100 CAMELOT DRIVE	PROJECT:	GARRETT COLLEGE CEPAC	PAGE:	25
	FOND DU LAC, WI 54935	LOCATION:	MCHENRY, MD		
	P: 920|926|9800 F: 920|926|9801	CLIENT:	LEONARD S. FIORE	DATE:	03/10/21
	www.excelengineer.com	PROJECT #:	2030860	ENGR:	EJ

WIND LOAD
SERVICE LEVEL

ASD DESIGN

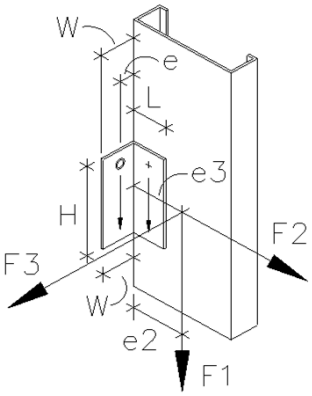

STUD: **VERTICAL**
CLIP: **SIDE**

DETAIL 39/D3

	F1 WL	F2 WL	F3 WL
9/S3	0	3097	0

INPUT VARIABLES

F1 MAX. (LB) =	**0.00**	
F2 MAX. (LB) =	**1548.50**	
F3 MAX. (LB) =	**0.00**	
W (IN) =	**2.00**	
L (IN) =	**2.00**	
H (IN) =	**4.00**	
e (IN) =	**0.1415**	
e2 (IN) =	N/A	
e3 (IN) =	N/A	
BEARING LENGTH AGAINST STRUCTURE "a" (IN) =	**4.00**	
GAP BETWEEN STUD AND STRUCTURE "b" (IN) =	**0.50**	
COUPLE ARM TO RESIST F1*e "Lm" (IN) =	**4.00**	
COUPLE ARM TO RESIST F1*e2 "Lm2" (IN) =	**4.00**	
Fy CLIP ANGLE (KSI) =	**50**	
Fu CLIP ANGLE (KSI) =	65	
MAIN WELD SIZE (IN) =	0.1415	
Tallowable WELD @ STEEL (LB) =	1202	
Vallowable WELD @ STEEL (LB) =	985	
RETURN WELD SIZE (IN) =	0.0566	
Tallowable WELD @ STEEL (LB) =	1566	
Vallowable WELD @ STEEL (LB) =	905	
Tallowable FASTENER @ STUD (LB) =	FASTENER	STUD
	309	198
Vallowable FASTENER @ STUD (LB) =	FASTENER	STUD
	324	534
STRESS INCREASE	**1.000**	
SEISMIC AMPLIFICATION & RESPONSE FACTOR	**1.000**	

CLIP ANGLE DESIGN:

BENDING F1	L-LEG BENDING M1 =		0.00	IN-LB	
BENDING F2	W-LEG BENDING M2 =		54.78	IN-LB	
BENDING F3	L&W-LEG BENDING M3 =		0.00	IN-LB	
COMP. F2	L-LEG COMPRESSION C2 =		1548.50	LB	
TENSION F2	L-LEG TENSION T2 =		1548.50	LB	
SHEAR F1	L&W LEG SHEAR =		0.00	LB	
THICKNESS OF L-LEG CLIP ANGLE REQ'D. =			0.0000	IN	
THICKNESS OF W-LEG CLIP ANGLE REQ'D. =			0.0523	IN	
CLIP REQUIRED =			16 GA.		
THICKNESS PROVIDED =		**16 GA.**	0.0566	IN	OK
L-LEG ALLOWABLE COMP. STRENGTH =			4129.24	LB	OK
L&W-LEG ALLOWABLE SHEAR STRENGTH =			3371.56	LB	OK

USE: 2 2" x 2" x 16 GA. x 4" LONG

WELD DESIGN TO STEEL:

MAX. FASTENER PRYING ACTION F1
PRYING FORCE @ CENTERLINE (LB) = 0.00

MAX. FASTENER PRYING ACTION F3
PRYING FORCE @ CENTERLINE (LB) = 0.00

LENGTH OF RETURN WELD REQUIRED

$$\frac{\text{PRYING F1}}{\text{Vall WELD @ STEEL}} + \frac{\text{PRYING F3}}{\text{Vall WELD @ STEEL}} = 0.0$$

MAX. FASTENER SHEAR RESULTANT F1 & F3
SHEAR RESULTANT @ CENTERLINE (LB) = 0.00

MAX. FASTENER PRYING ACTION F2
PRYING FORCE @ CENTERLINE (LB) = 1666.40

LENGTH OF MAIN WELD REQUIRED

$$\frac{\text{SHEAR F1 \& F3}}{\text{Vall WELD @ STEEL}} + \frac{\text{PRYING F2}}{\text{Tall WELD @ STEEL}} = 1.4$$

USE: 1	**0.1415"**	**FLARE BEVEL GROOVE WELD**	**x 2" LONG**	**MINIMUM MAIN WELD**
USE: 2	**0.0566"**	**LAP JOINT FILLET WELD**	**x 1" LONG**	**MINIMUM RETURN WELDS**

FASTENER DESIGN TO STUD: STUD: 600S200-54 50 KSI MIN.

MAX. FASTENER SECONDARY PRYING ACTION F2
PRYING FORCE @ FASTENER CENTERLINE (LB) = 109.56

MAX. FASTENER SHEAR RESULTANT F1 & F2
SHEAR RESULTANT @ FASTENER CENTERLINE (LB) = 1548.50

NUMBER OF FASTENERS REQUIRED:

$$\frac{\text{SECONDARY PRYING ACTION F2}}{\text{Tall FASTENER @ STUD}} + \frac{\text{SHEAR RESULTANT F1 \& F2}}{\text{Vall FASTENER @ STUD}} = 5.3$$

USE: 6 #10-16 EXCEL STANDARD SCREW MINIMUM, PER CLIP

REFERENCE: "DESIGN OF CLIP ANGLES FOR TENSION" - NEWSLETTER FOR THE LIGHT GAUGE STEEL ENGINEERS ASSOCIATION, SPRING 2002

FASTENERS TO STUD DESIGN VALUES PER: SEE DATA SHEEETS

© 2021 EXCEL ENGINEERING, INC.

EXCEL ARCHITECTS • ENGINEERS • SURVEYORS	100 CAMELOT DRIVE	PROJECT:	GARRETT COLLEGE CEPAC	PAGE:	26
	FOND DU LAC, WI 54935	LOCATION:	MCHENRY, MD		
	P: 920|926|9800 F: 920|926|9801	CLIENT:	LEONARD S. FIORE	DATE:	03/10/21
	www.excelengineer.com	PROJECT #:	2030860	ENGR:	EJ

WIND LOAD
SERVICE LEVEL

ASD DESIGN

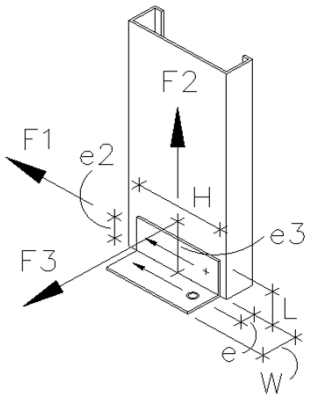

STUD: **VERTICAL**
CLIP: **BOTTOM**

DETAIL 39/D3

	F1 WL	F2 WL	F3 WL
9/S3	2656	0	0

INPUT VARIABLES

F1 MAX. (LB) =	**1328.00**
F2 MAX. (LB) =	**0.00**
F3 MAX. (LB) =	**0.00**
W (IN) =	**2.00**
L (IN) =	**2.00**
H (IN) =	**4.00**
e (IN) =	**0.1415**
e2 (IN) =	**1.00**
e3 (IN) =	N/A
BEARING LENGTH AGAINST STRUCTURE "a" (IN) =	**4.00**
GAP BETWEEN STUD AND STRUCTURE "b" (IN) =	**0.25**
COUPLE ARM TO RESIST F1*e "Lm" (IN) =	**4.00**
COUPLE ARM TO RESIST F1*e2 "Lm2" (IN) =	**4.00**
Fy CLIP ANGLE (KSI) =	**50**
Fu CLIP ANGLE (KSI) =	65
MAIN WELD SIZE (IN) =	0.1415
Tallowable WELD @ STEEL (LB) =	1202
Vallowable WELD @ STEEL (LB) =	985
RETURN WELD SIZE (IN) =	0.0566
Tallowable WELD @ STEEL (LB) =	1566
Vallowable WELD @ STEEL (LB) =	905
Tallowable FASTENER @ STUD (LB) =	FASTENER: 309; STUD: 198
Vallowable FASTENER @ STUD (LB) =	FASTENER: 324; STUD: 534
STRESS INCREASE	**1.000**
SEISMIC AMPLIFICATION & RESPONSE FACTOR	**1.000**

CLIP ANGLE DESIGN:

BENDING F1	L-LEG BENDING M1 =		1328.00	IN-LB	
BENDING F2	W-LEG BENDING M2 =		0.00	IN-LB	
BENDING F3	L&W-LEG BENDING M3 =		0.00	IN-LB	
COMP. F2	L-LEG COMPRESSION C2 =		0.00	LB	
TENSION F2	L-LEG TENSION T2 =		0.00	LB	
SHEAR F1	L&W LEG SHEAR =		1328.00	LB	
THICKNESS OF L-LEG CLIP ANGLE REQ'D. =			0.0166	IN	
THICKNESS OF W-LEG CLIP ANGLE REQ'D. =			0.0000	IN	
CLIP REQUIRED =			16 GA.		
THICKNESS PROVIDED =		**16 GA.**	0.0566	IN	OK
L-LEG ALLOWABLE COMP. STRENGTH =			4472.84	LB	OK
L&W-LEG ALLOWABLE SHEAR STRENGTH =			3371.56	LB	OK

USE: 2 2" x 2" x 16 GA. x 4" LONG

WELD DESIGN TO STEEL:

MAX. FASTENER PRYING ACTION F1
PRYING FORCE @ CENTERLINE (LB) = 0.00

MAX. FASTENER PRYING ACTION F3
PRYING FORCE @ CENTERLINE (LB) = 0.00

LENGTH OF RETURN WELD REQUIRED

$$\frac{\text{PRYING F1}}{\text{Vall WELD @ STEEL}} + \frac{\text{PRYING F3}}{\text{Vall WELD @ STEEL}} = 0.0$$

MAX. FASTENER SHEAR RESULTANT F1 & F3
SHEAR RESULTANT @ CENTERLINE (LB) = 1328.83

MAX. FASTENER PRYING ACTION F2
PRYING FORCE @ CENTERLINE (LB) = 0.00

LENGTH OF MAIN WELD REQUIRED

$$\frac{\text{SHEAR F1 \& F3}}{\text{Vall WELD @ STEEL}} + \frac{\text{PRYING F2}}{\text{Tall WELD @ STEEL}} = 1.3$$

USE: 1	**0.1415"**	**FLARE BEVEL GROOVE WELD**	**x 2" LONG**	**MINIMUM MAIN WELD**
USE: 2	**0.0566"**	**LAP JOINT FILLET WELD**	**x 1" LONG**	**MINIMUM RETURN WELDS**

FASTENER DESIGN TO STUD: STUD: 600S200-54 50 KSI MIN.

MAX. FASTENER SECONDARY PRYING ACTION F2
PRYING FORCE @ FASTENER CENTERLINE (LB) = 0.00

MAX. FASTENER SHEAR RESULTANT F1 & F2
SHEAR RESULTANT @ FASTENER CENTERLINE (LB) = 1328.00

NUMBER OF FASTENERS REQUIRED:

$$\frac{\text{SECONDARY PRYING ACTION F2}}{\text{Tall FASTENER @ STUD}} + \frac{\text{SHEAR RESULTANT F1 \& F2}}{\text{Vall FASTENER @ STUD}} = 4.1$$

USE: 5 #10-16 EXCEL STANDARD SCREW MINIMUM, PER CLIP

REFERENCE: "DESIGN OF CLIP ANGLES FOR TENSION" - NEWSLETTER FOR THE LIGHT GAUGE STEEL ENGINEERS ASSOCIATION, SPRING 2002

FASTENERS TO STUD DESIGN VALUES PER: SEE DATA SHEEETS

© 2021 EXCEL ENGINEERING, INC.

GARRETT COLLEGE CEPAC

687 MOSSER ROAD
MCHENRY, MARYLAND

GENERAL NOTES

1. EXCEL ENGINEERING IS ACTING AS A SPECIALTY STRUCTURAL COMPONENT ENGINEER, DESIGNING THE COLD-FORMED STEEL FRAMING OF THE PROJECT ONLY. EXCEL ENGINEERING TAKES FULL RESPONSIBILITY FOR THE DESIGN OF THE STRUCTURAL COLD-FORMED STEEL FRAMING AND THEIR ATTACHMENT TO THE SUPPORTING STRUCTURAL ELEMENTS OF THE BUILDING. EXCEL ENGINEERING TAKES NO RESPONSIBILITY FOR THE DESIGN OF ANY SUPPORTING STRUCTURAL ELEMENTS. IT IS ASSUMED THAT ALL SUPPORTING STRUCTURAL ELEMENTS HAVE BEEN DESIGNED BY THE PROJECT ENGINEER OF RECORD (EOR) AND/OR ARCHITECT OF RECORD (AOR) TO WITHSTAND THE FORCES IMPOSED BY THE STRUCTURAL COLD-FORMED STEEL FRAMING. EXCEL ENGINEERING EXPECTS THAT THIS COMPONENT SUBMITTAL WILL BE REVIEWED BY THE EOR AND/OR AOR FOR CONFORMANCE WITH THE OVERALL PROJECT REQUIREMENTS.
2. SECTION PROPERTIES ARE ASSUMED TO BE IN ACCORDANCE WITH THE AMERICAN IRON AND STEEL INSTITUTE "NORTH AMERICAN SPECIFICATION FOR THE DESIGN OF COLD-FORMED STEEL STRUCTURAL MEMBERS" 2012 EDITION WITH SUPPLEMENTS. THE CONTRACTOR IS TO VERIFY THAT THE MATERIALS INSTALLED MEET OR EXCEED THESE DESIGN VALUES.
3. ALL COLD-FORMED STEEL FRAMING HAS BEEN DESIGNED FOR UNIFORM LATERAL LOADS AND WALL CONSTRUCTION DEAD LOADS ONLY. THE WEIGHT OF ANY MASONRY VENEER IS ASSUMED TO BE SUPPORTED INDEPENDENT OF THE COLD-FORMED STEEL FRAMING, U.N.O. THE COLD-FORMED STEEL FRAMING HAS BEEN DESIGNED TO LATERALLY SUPPORT ANY MASONRY VENEER.
4. ALLOWABLE STRESS HAS NOT BEEN INCREASED DUE TO WIND. HOWEVER, THE STRENGTH LEVEL WIND LOAD HAS BEEN REDUCED TO 42% (70% FOR SERVICE LEVEL) FOR THE PURPOSE OF DETERMINING DEFLECTION PER IBC 2015, TABLE 1604.3, NOTE F.
5. THE CONTENTS OF THIS SUBMITTAL SHOW THE APPLICATION OF COLD-FORMED STEEL FRAMING COMPONENTS. THE FRAMING CONTRACTOR IS TO REFER TO THE PROJECT CONTRACT DOCUMENTS FOR ADDITIONAL REQUIREMENTS.
6. DIMENSIONS SHOWN HEREIN ARE FOR ENGINEERING PURPOSES **ONLY** AND MUST BE REVIEWED FOR THE PURPOSE OF APPROVAL. ALL CONDITIONS ARE SUBJECT TO SUCH APPROVAL, AND TO FIELD VERIFICATION PRIOR TO FABRICATION OR ERECTION.
7. MECHANICAL BRIDGING SHALL BE USED IN ALL CASES WHERE INDICATED. INSTALLATION OF BRIDGING MUST BE COMPLETED BEFORE ANY LOADS ARE APPLIED TO THE SYSTEM. ALL BRIDGING SHALL BE TERMINATED AT JAMBS, CORNER STUDS OR COLUMNS. BRIDGING ENDS SHALL **NOT** HANG LOOSE. STUDS SHALL BE BRACED AGAINST ROTATION.
8. FOR SPECIFIC REQUIREMENTS AND WARRANTY INFORMATION ON SYSTEMS OR MATERIALS CONNECTED AND APPURTENANT TO THE COLD-FORMED STEEL FRAMING INCLUDING CLADDING, SHEATHING, ROOFING, WINDOWS, DOORS, CAULKING AND FLASHING, REFER TO THE MANUFACTURERS' DATA. THIS SUBMITTAL ASSUMES NO RESPONSIBILITY FOR THE PROPER CONSTRUCTION OR FUNCTION OF THE TOTAL ARCHITECTURAL ASSEMBLY. THE COORDINATION OF ARCHITECTURAL AND/OR STRUCTURAL BUILDING COMPONENTS IS NOT UNDER THE SCOPE OF THIS SUBMITTAL OR CONTRACT.
9. ALL FRAMING COMPONENTS SHALL BE CUT SQUARELY FOR ATTACHMENT TO PERPENDICULAR MEMBERS. STUD ENDS MUST SEAT TIGHTLY INTO TRACKS IN ALL BEARING APPLICATIONS.
10. NO SPLICES IN STUDS, JOISTS, HEADERS, OR OTHER LOAD CARRYING MEMBERS MAY BE MADE WITHOUT PRIOR ENGINEERING REVIEW AND SPECIFIC DETAILS FOR ANY SUCH REVISION TO THE ORIGINAL DESIGN.
11. THIS SUBMITTAL DOES **NOT** TAKE PRECEDENCE OVER THE CONTRACT DOCUMENTS WITH REGARD TO MINIMUM KSI, THICKNESS, DEPTH, FLANGE WIDTH, OR SPACING, UNLESS APPROVED BY THE EOR AND/OR AOR.
12. THE CONNECTOR VALUES USED IN THIS SUBMITTAL ARE FROM PUBLISHED MANUFACTURER SPECIFICATIONS (VALUES ENCLOSED). ALL SCREW AND WELD VALUES ARE BASED ON THE 2015 AISI NORTH AMERICAN SPECIFICATION FOR THE DESIGN OF COLD-FORMED STEEL STRUCTURAL MEMBERS WITH SUPPLEMENTS. WELDING PROCEDURE SHALL BE IN ACCORDANCE WITH AWS D1.3-08. THE CONTRACTOR SHALL CONFIRM WITH THE MANUFACTURER THAT THE CONNECTORS THEY INTEND TO USE MEET OR EXCEED THE DESIGN VALUES REQUIRED.
13. THE CONTRACTOR IS RESPONSIBLE TO NOT OVERLOAD MEMBERS DURING CONSTRUCTION OR ERECTION AND TO SUPPLY ADEQUATE TEMPORARY BRACING UNTIL PERMANENT BRIDGING PROVIDING STABILITY TO BOTH FLANGES IS IN PLACE.
14. TOUCH-UP ALL WELDS WITH ZINC-RICH PAINT (ASTM A-780). APPLY TO BOTH SIDES OF STUD.
15. FUTURE EXPANSION HAS **NOT** BEEN CONSIDERED AS PART OF THE DESIGN OF THIS PROJECT.
16. THE CONTRACTOR IS CAUTIONED AS TO NOT STORE ANY CONSTRUCTION MATERIALS OR UNDERTAKE ANY CONSTRUCTION OPERATION WHICH WILL EXCEED THE DESIGN LIVE LOAD CAPACITIES NOTED.

DESIGN CRITERIA

GOVERNING CODES

2015 "INTERNATIONAL BUILDING CODE"	IBC 2015
2010 "MINIMUM DESIGN LOADS FOR BUILDINGS AND OTHER STRUCTURES"	ASCE 7-10
2012 "NORTH AMERICAN SPECIFICATION FOR THE DESIGN OF COLD-FORMED STEEL STRUCTURAL MEMBERS"	AISI S100-12
2008 "STRUCTURAL WELDING CODE - SHEET STEEL"	AWS D1.3-08
2014 "BUILDING CODE REQUIREMENTS FOR STRUCTURAL CONCRETE"	ACI 318-14

DESIGN STRESSES

CONCRETE	3500 PSI	= COMPRESSIVE STRENGTH (f'c)
STRUCTURAL STEEL	36 KSI (MIN)	= YIELD STRESS (Fy) - ASTM A-36: ALL SHAPES U.N.O.
COLD-FORMED STEEL FRAMING	33 KSI (MIN)	= YIELD STRESS (Fy) - A1003 U.N.O.
WELD ELECTRODES	60 KSI (MIN)	= TENSILE STRENGTH (Fxx) @ THICKNESS < 1/8" (CFS FRAMING)
	70 KSI (MIN)	= TENSILE STRENGTH (Fxx) @ ALL OTHER THICKNESS

DESIGN LOADING

WIND:

120 MPH	= STRENGTH LEVEL WIND SPEED
93 MPH	= EQUIVALENT SERVICE LEVEL WIND SPEED
II	= RISK CATEGORY
"C"	= EXPOSURE CATEGORY
0.18	= INTERNAL PRESSURE COEFFICIENT

STRENGTH LEVEL C&C PRESSURE/SUCTION (MINIMUM = 16 PSF)								
ZONE		EFFECTIVE AREA (FT^2)							
		10.0		50.0		100.0		200.0	
WALL	4	33.81	-36.62	30.33	-33.15	28.83	-31.65	27.33	-30.15
WALL	5	33.81	-45.07	30.33	-38.12	28.83	-35.12	27.33	-32.13

STRENGTH LEVEL LOADS MAY BE REDUCED TO 42% FOR THE PURPOSE OF DETERMINING DEFLECTION PER IBC 2015, TABLE 1604.3, NOTE F.

SERVICE LEVEL (D+.6W) C&C PRESSURE/SUCTION (MINIMUM = 9.6 PSF)								
ZONE		EFFECTIVE AREA (FT^2)							
		10.0		50.0		100.0		200.0	
WALL	4	20.28	-21.97	18.20	-19.89	17.30	-18.99	16.40	-18.09
WALL	5	20.28	-27.04	18.20	-22.87	17.30	-21.07	16.40	-19.28

SERVICE LEVEL LOADS MAY BE REDUCED TO 70% FOR THE PURPOSE OF DETERMINING DEFLECTION PER IBC 2015, TABLE 1604.3, NOTE F.

SEISMIC:

II	= RISK CATEGORY	S_S = 0.110	S_1 = 0.054 I_E = 1.00
"D"	= SITE CLASS	S_{DS} = 0.117	S_{D1} = 0.086
"B"	= SEISMIC DESIGN CATEGORY		
1.97 PSF	= 0.7E (WALL ELEMENTS)	**WIND LOAD CONTROLS**	
6.16 PSF	= 0.7E (FASTENERS)	**WIND LOAD CONTROLS**	

DEAD:

50 PSF	= WALL DEAD LOAD @ BRICK VENEER	(46 PSF ACTUAL)
10 PSF	= WALL DEAD LOAD EVERYWHERE ELSE	(6 PSF ACTUAL)
10 PSF	= SOFFIT DEAD LOAD	(4 PSF ACTUAL)

DEFLECTION LIMITS (BASED ON STUD PROPERTIES ALONE):

L / 600	WL	@ BRICK VENEER	(PER SPECIFICATION)
L / 360	WL	EVERYWHERE ELSE	(PER SPECIFICATION)
1 in.		SLIP GAP	(PER SPECIFICATION)

SHEET INDEX

SHEET	SHEET TITLE	CONSTRUCTION SET	REVISION SET 1
	CFS FRAMING DRAWING SUBMITTAL DATE:	AUG. 20, 2020	MAR. 12, 2021
	ARCHITECTURAL CONTRACT DOCUMENTS DATED:	DEC. 13, 2019 ADDENDUM 02	FEB. 12, 2021 ASI 08
	STRUCTURAL CONTRACT DOCUMENTS DATED:	DEC. 11, 2019 ADDENDUM 01	FEB. 12, 2021 ASI 08
C1	COVER SHEET	●	●
C2	GENERAL INFORMATION	●	
E1	ELEVATIONS	●	●
E2	ELEVATIONS	●	●
S1	WALL SECTIONS	●	●
S2	WALL SECTIONS	●	●
S3	WALL SECTIONS	●	●
S4	WALL SECTIONS	●	●
S5	WALL SECTIONS	●	●
S6	WALL SECTIONS	●	●
S7	WALL SECTIONS	●	●
D1	CONNECTION DETAILS	●	●
D2	CONNECTION DETAILS	●	●
D3	CONNECTION DETAILS	●	●

EXCEL
ARCHITECTS • ENGINEERS • SURVEYORS
Always a Better Plan
100 CAMELOT DRIVE
FOND DU LAC, WI 54935
PHONE: (920) 926-9800
WWW.EXCELENGINEER.COM

PROJECT INFORMATION

PROJECT CONTRACTOR
LEONARD S. FIORE, INC.
5506 6TH AVENUE
ALTOONA, PA 16602

COLD-FORMED STEEL SUBMITTAL FOR
GARRETT COLLEGE CEPAC
687 MOSSER ROAD • MCHENRY, MD 21541

PROJECT ENGINEER

ERIK JOHNSON
E-MAIL: Erik.J@ExcelEngineer.com
DRAWN BY: AEB

PROFESSIONAL SEAL

SUBMITTAL DATES

ISSUE DATE AUG. 20, 2020

REVISIONS

1 MAR. 12, 2021

PROJECT NUMBER
2030860

SHEET INFORMATION

SHEET NUMBER
C1

2020 © EXCEL ENGINEERING, INC.

FABRICATION

CORNER FRAMING

CORNER CONSTRUCTION NOTES:

1.) PROVIDE (3) STUD CORNERS, TYP.

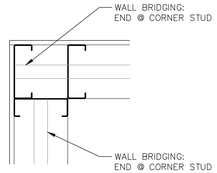

OUTSIDE CORNER

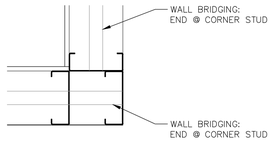

INSIDE CORNER

BEARING, LEVELNESS, TWIST AND PLUMBNESS OF CFS FRAMING

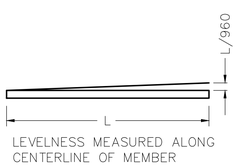

LEVELNESS OF HORIZONTAL MEMBERS

TWIST OF MEMBERS

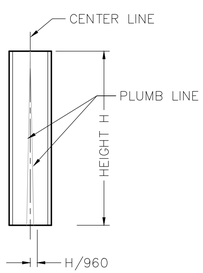

STUD PLUMBNESS FACE OF STUD

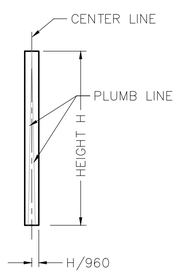

STUD PLUMBNESS SIDE OF STUD

APPROVED FASTENERS

POWER DRIVEN FASTENERS

POWER DRIVEN FASTENER NOTES:

1.) MUST BE INSTALLED PERPENDICULAR
2.) MUST BE INSTALLED FULLY SEATED

P.D.F. TO STEEL

(POINT OF P.D.F. TO PENETRATE STRUC. STEEL)

- "HILTI" X-U (ICC ESR-2269)
- "RAMSET" TE (ICC ESR-1799)
- "POWERS" SPIRAL CSI (ICC ESR-2024)

NOTE:
FOR STEEL THICKNESS > 1/2"
HILTI X-U P.D.F.'s ARE THE
ONLY APPROVED FASTENER.

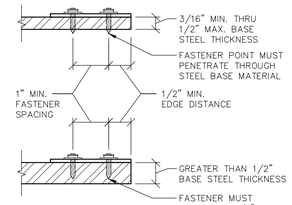

P.D.F. TO CONCRETE

(REFER TO DETAIL FOR REQUIRED LENGTH)

- "HILTI" X-U OR X-P (ICC ESR-2269)
- "RAMSET" TE (ICC ESR-1799)
- "POWERS" SPIRAL CSI (ICC ESR-2024)
- "SIMPSON" PDPA (ICC ESR-2138)

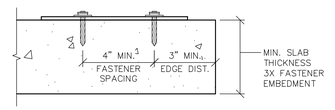

SCREWS

SCREW FASTENER NOTES:

1.) MUST BE INSTALLED PERPENDICULAR
2.) MUST BE INSTALLED FULLY SEATED
3.) MIN. (3) SCREW THREADS EXPOSED BACKSIDE OF CONN. (U.N.O.)

SCREWS TO COLD FORMED STEEL

- "ITW BUILDEX" TEKS (ICC ESR-1976)
- "HILTI" KWIK-PRO (ICC ESR-2196)
- "GRABBER" DRIVAL (ICC ESR-5280)
- "PRO-TWIST" DARTS (ICC ESR-1408)

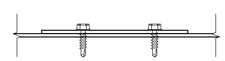

SCREWS TO STRUCTURAL STEEL

- "ITW BUILDEX" TEKS

STEEL BASE MATERIAL	MIN. DRILL POINT (#12 SCREWS)
1/8"	TEKS/2
3/16"	TEKS/2
1/4"	TEKS/4
3/8"	TEKS/4.5
1/2"	TEKS/5

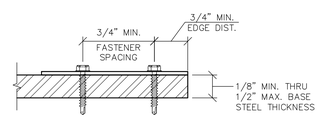

METAL TO WOOD SCREWS

- "BUILDEX" TRUGRIP GT

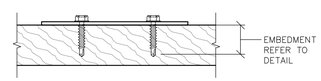

CONCRETE SCREW ANCHORS

CONCRETE SCREW ANCHOR FASTENER NOTES:

1.) MUST BE INSTALLED PERPENDICULAR
2.) MUST BE INSTALLED FLUSH
3.) MUST FOLLOW MANUFACTURER INSTALLATION INSTRUCTIONS

SCREW ANCHORS TO CONCRETE

(REFER TO DETAIL FOR REQUIRED LENGTH)

- "HILTI" KWIK HUS-EZ (ICC ESR-3027)
- "SIMPSON" TITEN HD (ICC ESR-2713)

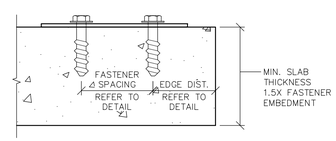

UNDERCUT ANCHORS

UNDERCUT ANCHOR NOTES

1.) MUST BE INSTALLED PERPENDICULAR
2.) MUST BE INSTALLED FLUSH
3.) MUST FOLLOW MANUFACTURER INSTALLATION INSTRUCTIONS
4.) THREADED ROD OR BOLT: F1554 GR. 36 OR A36
5.) NUT: ASTM A194 / A563 GRADE A (NOT REQUIRED W/ BOLT
6.) WASHER: ASTM F436

UNDERCUT ANCHORS TO CONCRETE

(REFER TO DETAIL FOR SIZE)

- "DEWALT" MINI-UNDERCUT+ (ICC ESR-3912)

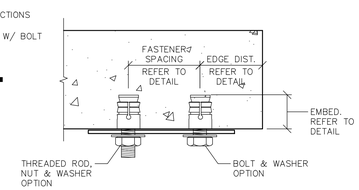

WELD

WELD FASTENING NOTES:

1.) TOUCH-UP ALL WELDS WITH ZINC-RICH PAINT (ASTM A-780)
2.) BURN THRU IS NOT ALLOWED
3.) WELD THICKNESS TO BE BASED ON THINNEST MATERIAL BEING WELDED
4.) WELDING PERSONNEL SHALL BE CERTIFIED UNDER CSA STANDARD W47.1 FOR ARC WELDING AND CSA STANDARD W55.3 FOR RESISTANCE WELDING
5.) WELDING PROCEDURE SHALL BE IN ACCORDANCE WITH AWS D1.3-08

WELD THICKNESS	
STEEL STUD THICKNESS	WELD THICKNESS (t)
33 MILS	NO WELDING
43 MILS	1/8"
54 MILS	1/8"
68 MILS	1/8"
97 MILS	5/32"

MEMBER DESIGNATION

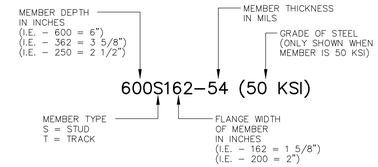

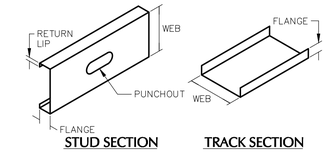

STUD SECTION TRACK SECTION

MILS TO GAUGE CONVERSION CHART	
MILS	GAUGE
33 MILS	20 GA.
43 MILS	18 GA.
54 MILS	16 GA.
68 MILS	14 GA.
97 MILS	12 GA.

ABBREVIATIONS

A/E.	ARCHITECT/ ENGINEER	CONST.	CONSTRUCTION	EXT.	EXTERIOR	MIN.	MINIMUM	SCHED.	SCHEDULE
A.F.F.	ABOVE FINISH FLOOR	CONT.	CONTINUOUS	F.F.	FINISH FLOOR	MECH.	MECHANICAL	SEC.	SECTION
ALT.	ALTERNATE	CONTR.	CONTRACTOR	F.T.	FIRE TREATED	MFR.	MANUFACTURE	SHT.	SHEET
AOR	ARCHITECT OF RECORD	CONN.	CONNECTION	FLR.	FLOOR	MISC.	MISCELLANEOUS	SIM.	SIMILAR
ARCH.	ARCHITECT	CRC	COLD-ROLLED CHANNEL	FT.	FOOT/FEET	MEZZ.	MEZZANINE	SPEC.	SPECIFICATION
BD.	BOARD	DBL.	DOUBLE	GA.	GAUGE	N.I.C.	NOT IN CONTRACT	STD.	STANDARD
BLDG.	BUILDING	DEG.	DEGREE	G.C.	GENERAL CONTRACTOR	NO. /#	NUMBER	STRUC.	STRUCTURAL
BLK'G	BLOCKING	DET.	DETAIL	GYP.	GYPSUM	N.T.S.	NOT TO SCALE	SYS.	SYSTEM
BOT.	BOTTOM	DIAG.	DIAGONAL	HDR.	HEADER	OPP.	OPPOSITE	T&B.	TOP & BOTTOM
B.O.	BOTTOM OF	DIA. / ø	DIAMETER	H.P.	HIGH POINT	O.C.	ON CENTER	T.O.	TOP OF
BM.	BEAM	DIM.	DIMENSION	HVAC	HEATING, VENTILATING & AIR CONDITIONING	O.H.	OVERHEAD	TYP.	TYPICAL
BRG.	BEARING	DWG.	DRAWING			P.D.F.	POWER DRIVEN FASTENER	U.N.O.	UNLESS NOTED OTHERWISE
CLG.	CEILING	D.W.	DRYWALL	INSUL.	INSULATED	PL. / ℙ	PLATE	VERT.	VERTICAL
CFS	COLD FORMED STEEL	E.A.	EACH	INT.	INTERIOR	PLYWD.	PLYWOOD	V.S.C.	VERTICAL SLIDE CLIP
CTR.	CENTER	E.I.F.S.	EXTERIOR INSULATION FINISH SYSTEM	L.P.	LOW POINT	PT	POST-TENSIONED	VEST.	VESTIBULE
C.J.	CONSTRUCTION JOINT/ CONTROL JOINT	E.J.	EXPANSION JOINT	LDM	LOAD DISTRIBUTION MEMBER	R.O.	ROUGH OPENING	W/	WITH
CL. / ℄	CENTER LINE	EL.	ELEVATION	LLH	LONG LEG HORIZONTAL	REQ'D.	REQUIRED	W/O	WITHOUT
COL.	COLUMN	ENG.	ENGINEER	LLV	LONG LEG VERTICAL	REV.	REVISION	WD.	WOOD
CMU	CONCRETE MASONRY UNIT	EOR	ENGINEER OF RECORD	LSH	LONG SIDE HORIZONTAL	REINF.	REINFORCING	WDW.	WINDOW
CONC.	CONCRETE	EQ.	EQUAL	LSV	LONG SIDE VERTICAL	REF.	REFERENCE		
				MAX.	MAXIMUM	S.D.S.	SELF-DRILLING SCREW		

HOLE REINFORCING

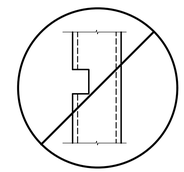

DO NOT NOTCH STEEL STUDS

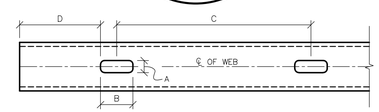

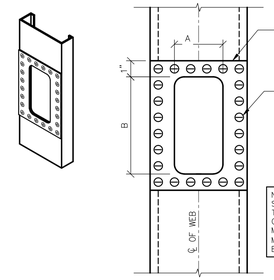

NOTE:
STEEL PATCH SHALL BE OF A THICKNESS EQUIVALENT TO OR GREATER THAN THE RECEIVING MEMBER AND SHALL EXTEND A MINIMUM OF 1" BEYOND ALL EDGES OF THE HOLE.

WALL FRAMING MAXIMUM HOLE SIZE W/O REINFORCING				
STUD SIZE	MAXIMUM HOLE DEPTH (A)	MAXIMUM HOLE LENGTH (B)	MINIMUM HOLE SPACING (C)	MINIMUM HOLE EDGE DISTANCE (D)
3 5/8" STUD	1 1/2"	4"	7"	10"
6" STUD	1 1/2"	4"	11"	10"
8" STUD	1 1/2"	4"	16"	10"
10" STUD	1 1/2"	4"	20"	10"
12" STUD	1 1/2"	4"	24"	10"

ROOF/ FLOOR FRAMING MAXIMUM HOLE SIZE W/O REINFORCING				
JOIST SIZE	MAXIMUM HOLE DEPTH (A)	MAXIMUM HOLE LENGTH (B)	MINIMUM HOLE SPACING (C)	MINIMUM HOLE EDGE DISTANCE (D)
6" STUD (20, 18, 16, 14, 12 GA.)	2"	5 1/4"	16 1/2"	3"
8" STUD (18, 16, 14, 12 GA.)	3"	6"	24"	3 1/2"
10" STUD (16, 14, 12 GA.)	4"	6"	24"	3 1/2"
12" STUD (16 GA.)	1 1/2"	4"	24"	10"
12" STUD (14 & 12 GA.)	4 3/4"	6"	24"	3 1/2"

WALL/ ROOF/ FLOOR FRAMING MAXIMUM HOLE SIZE W/ REINFORCING				
STUD/JOIST SIZE	MAXIMUM HOLE DEPTH (A)	MAXIMUM HOLE LENGTH (B)	MINIMUM HOLE SPACING (C)	MINIMUM HOLE EDGE DISTANCE (D)
3 5/8" STUD	1 3/4"	6"	16"	10"
6" STUD	3"	6"	16"	10"
8" STUD	4"	8"	24"	10"
10" STUD	5"	10"	24"	10"
12" STUD	6"	12"	24"	10"

DRAWING INFORMATION

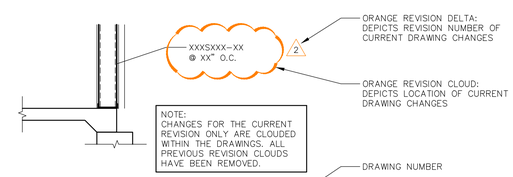

EXCEL
ARCHITECTS • ENGINEERS • SURVEYORS
Always a Better Plan
100 CAMELOT DRIVE
FOND DU LAC, WI 54935
PHONE: (920) 926-9800
WWW.EXCELENGINEER.COM

PROJECT INFORMATION

PROJECT CONTRACTOR
LEONARD S. FIORE, INC.
5506 6TH AVENUE
ALTOONA, PA 16602

COLD-FORMED STEEL SUBMITTAL FOR
GARRETT COLLEGE CEPAC
687 MOSSER ROAD • MCHENRY, MD 21541

PROJECT ENGINEER

ERIK JOHNSON
E-MAIL: Erik.J@ExcelEngineer.com
DRAWN BY: AEB

PROFESSIONAL SEAL

SUBMITTAL DATES

ISSUE DATE AUG. 20, 2020

REVISIONS

1 MAR. 12, 2021

PROJECT NUMBER

2030860

SHEET INFORMATION

SHEET NUMBER

C2

2020 © EXCEL ENGINEERING, INC.

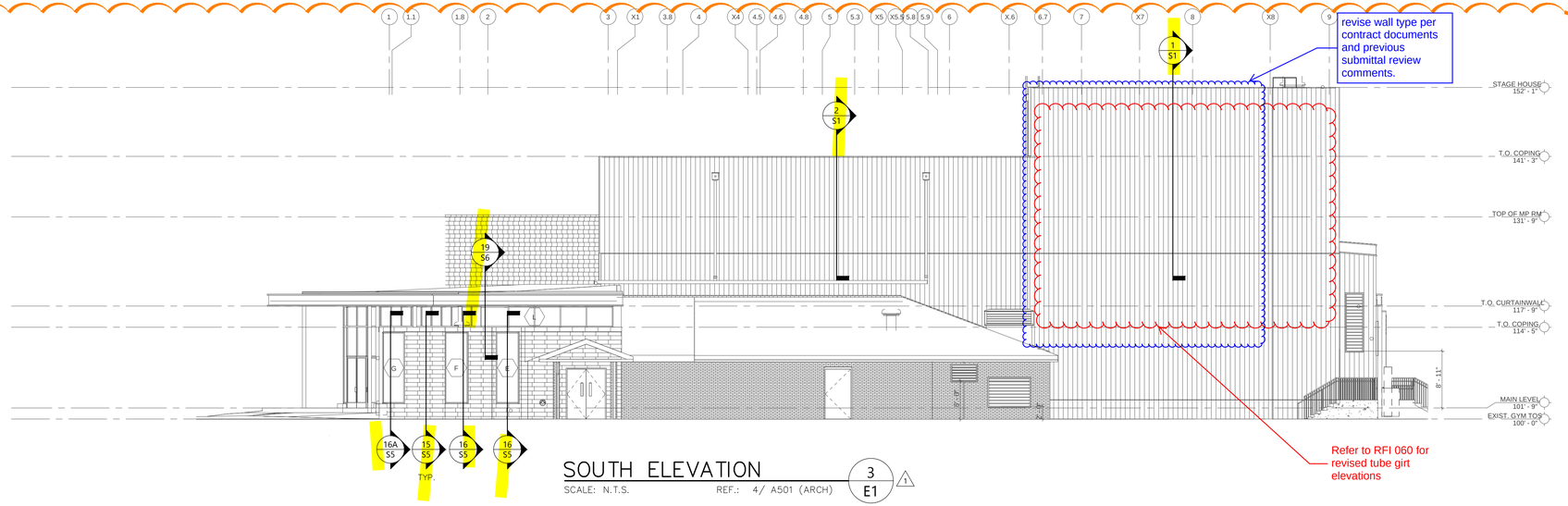

SOUTH ELEVATION

SCALE: N.T.S. REF.: 4/ A501 (ARCH) 3 E1

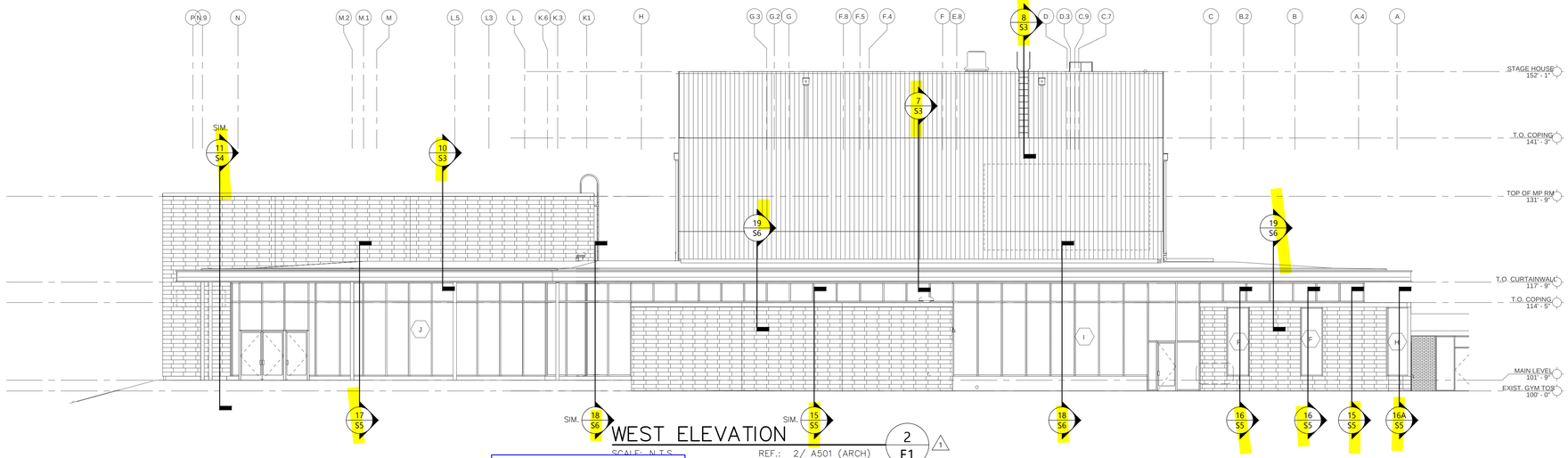

WEST ELEVATION

SCALE: N.T.S. REF.: 2/ A501 (ARCH) 2 E1

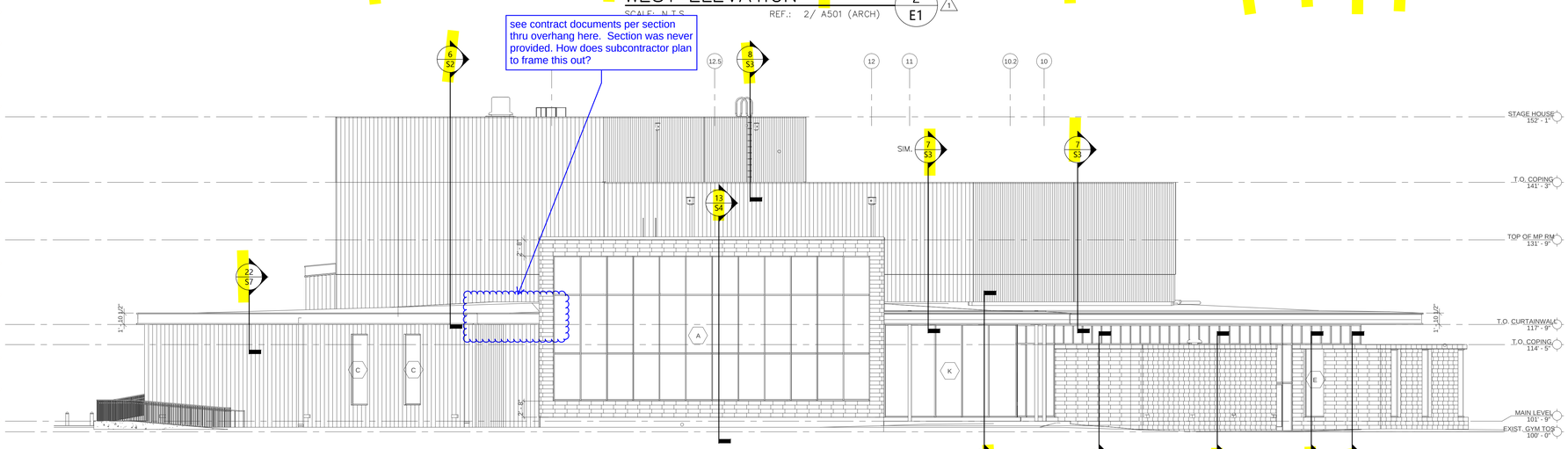

NORTHWEST ELEVATION

SCALE: N.T.S. REF.: 1/ A501 (ARCH) 1 E1

EXCEL
ARCHITECTS • ENGINEERS • SURVEYORS
Always a Better Plan
100 CAMELOT DRIVE
FOND DU LAC, WI 54935
PHONE: (920) 926-9800
WWW.EXCELENGINEER.COM

PROJECT INFORMATION

PROJECT CONTRACTOR
LEONARD S. FIORE, INC.
5506 6TH AVENUE
ALTOONA, PA 16602

COLD-FORMED STEEL SUBMITTAL FOR
GARRETT COLLEGE CEPAC
687 MOSSER ROAD • MCHENRY, MD 21541

PROJECT ENGINEER

ERIK JOHNSON
E-MAIL: Erik.J@ExcelEngineer.com
DRAWN BY: AEB

PROFESSIONAL SEAL

STATE OF MARYLAND
KARL SCHERZER
No. 30311
PROFESSIONAL ENGINEER

SUBMITTAL DATES

ISSUE DATE AUG. 20, 2020

REVISIONS

1 MAR. 12, 2021

PROJECT NUMBER

2030860

SHEET INFORMATION

SHEET NUMBER

E1

2020 © EXCEL ENGINEERING, INC.

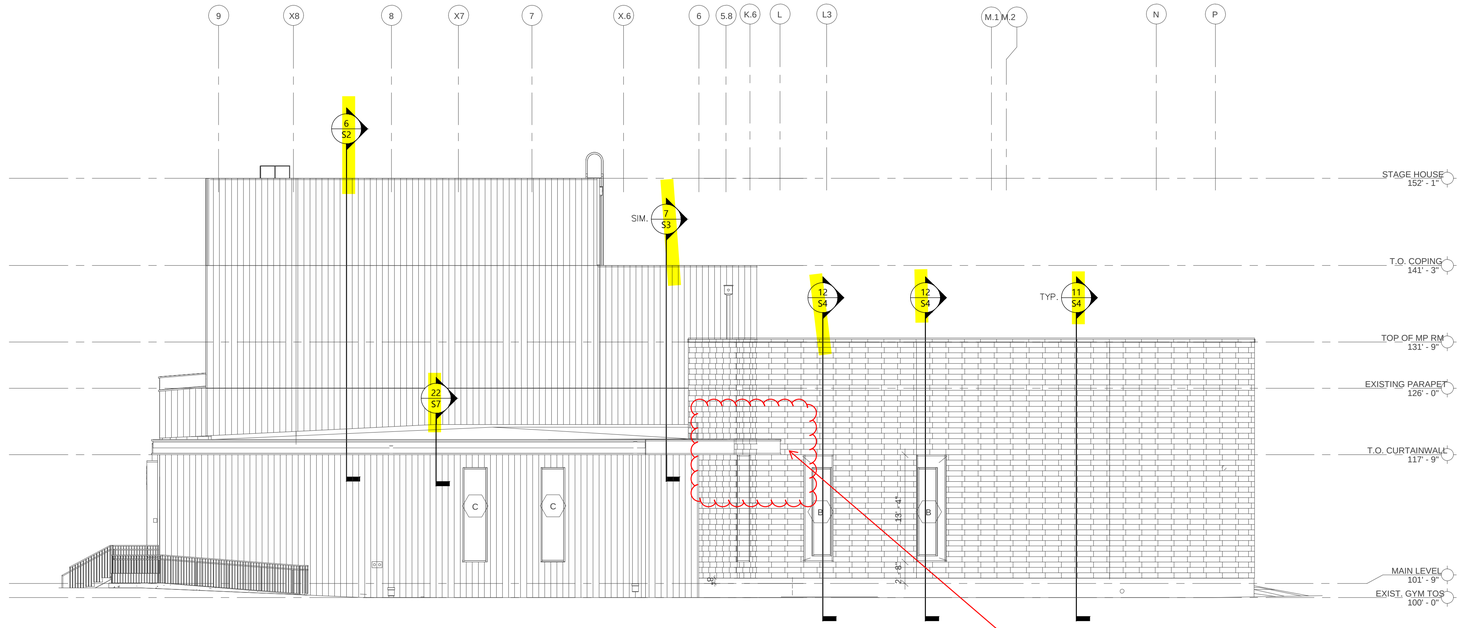

NORTHEAST ELEVATION

SCALE: N.T.S. REF.: 2/ A502 (ARCH)

5 / E2 (1)

Contractor to coordinate. Brace studs to wide flange (not tube) at overhanging low roof (see S103A)

SECTION NOT INCLUDED WITH THE SHOP DRAWINGS - ASSUMPTION IS THIS IS A TYPO AND SECTION IS SUPPOSED TO BE LABELED 20/S6

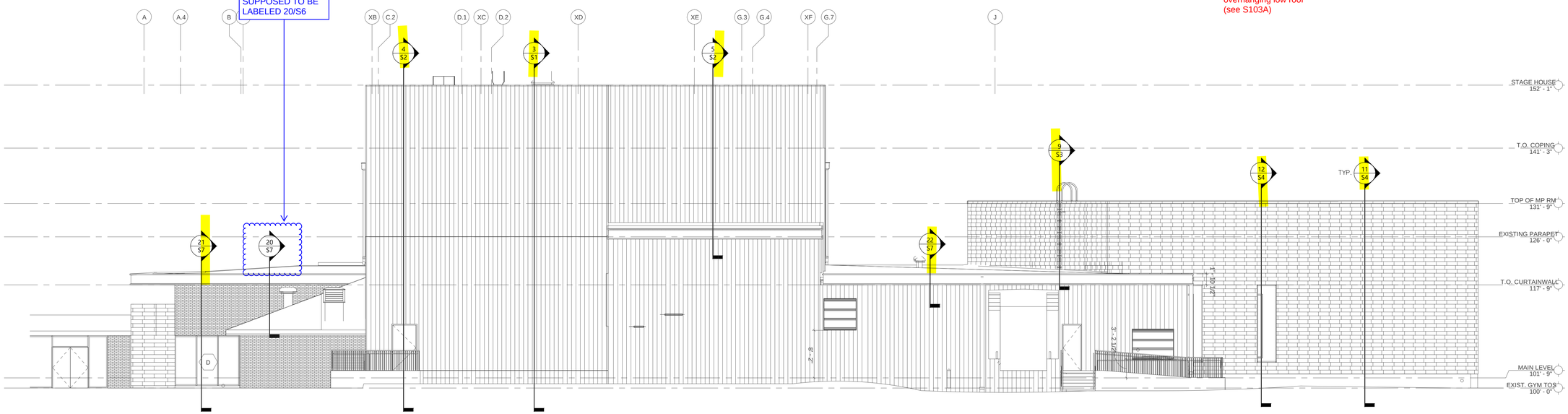

EAST ELEVATION

SCALE: N.T.S. REF.: 1/ A502 (ARCH)

4 / E2 (1)

EXCEL
ARCHITECTS • ENGINEERS • SURVEYORS
Always a Better Plan
100 CAMELOT DRIVE
FOND DU LAC, WI 54935
PHONE: (920) 926-9800
WWW.EXCELENGINEER.COM

PROJECT INFORMATION

PROJECT CONTRACTOR
LEONARD S. FIORE, INC.
5506 6TH AVENUE
ALTOONA, PA 16602

COLD-FORMED STEEL SUBMITTAL FOR
GARRETT COLLEGE CEPAC
687 MOSSER ROAD • MCHENRY, MD 21541

PROJECT ENGINEER

ERIK JOHNSON
E-MAIL: Erik.J@ExcelEngineer.com
DRAWN BY: AEB

PROFESSIONAL SEAL

STATE OF MARYLAND
KARL SCHERZER
No. 30311
PROFESSIONAL ENGINEER

SUBMITTAL DATES

ISSUE DATE	AUG. 20, 2020
REVISIONS	
1	MAR. 12, 2021

PROJECT NUMBER

2030860

SHEET INFORMATION

SHEET NUMBER

E2

2020 © EXCEL ENGINEERING, INC.

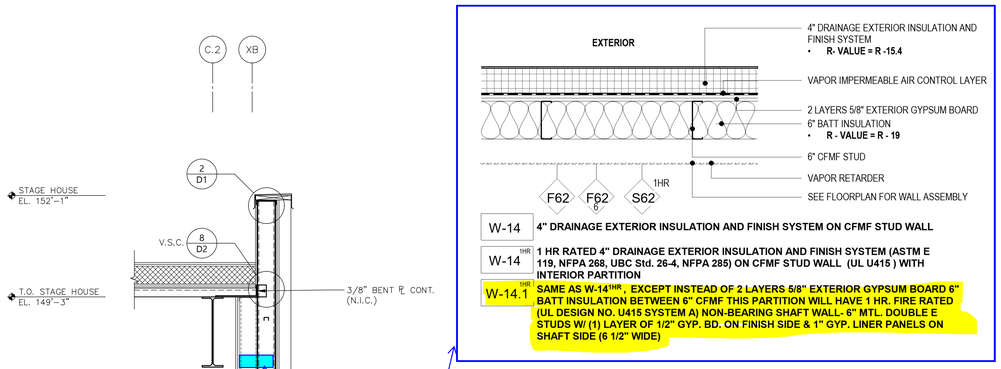

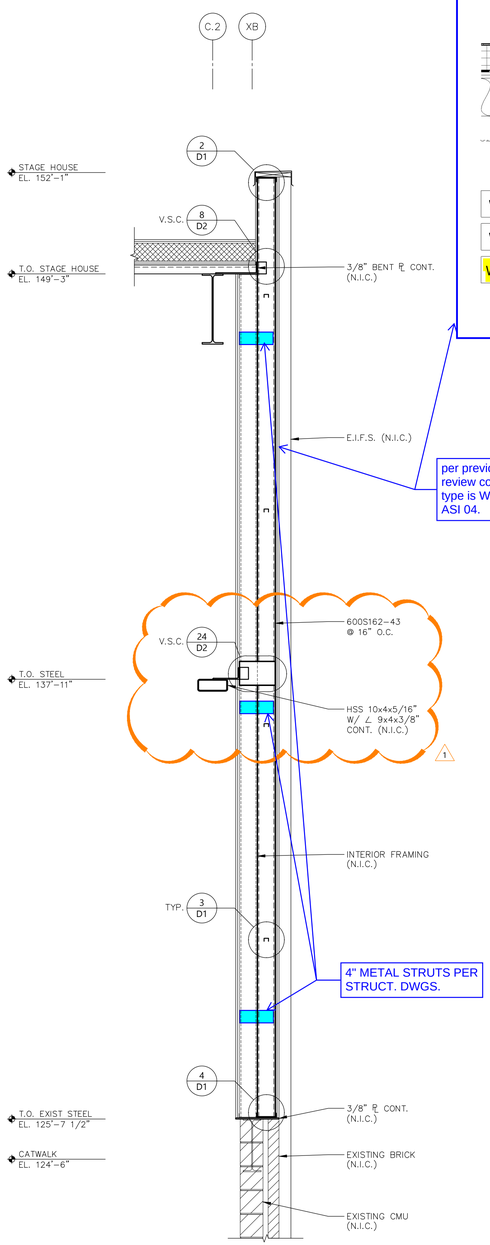

per previous submittal review comment: wall type is W-14.1 1 hr per ASI 04.

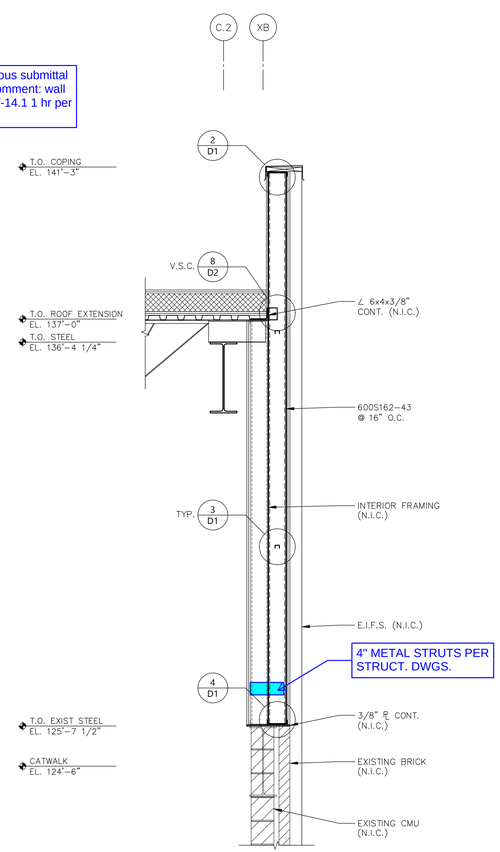

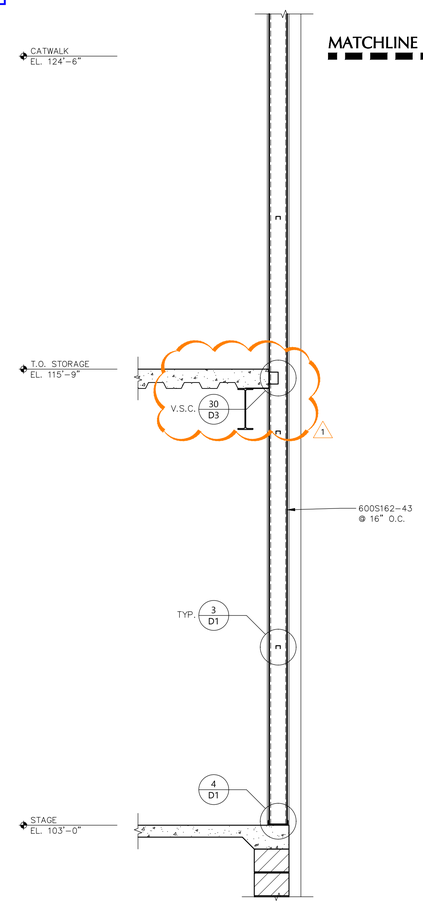

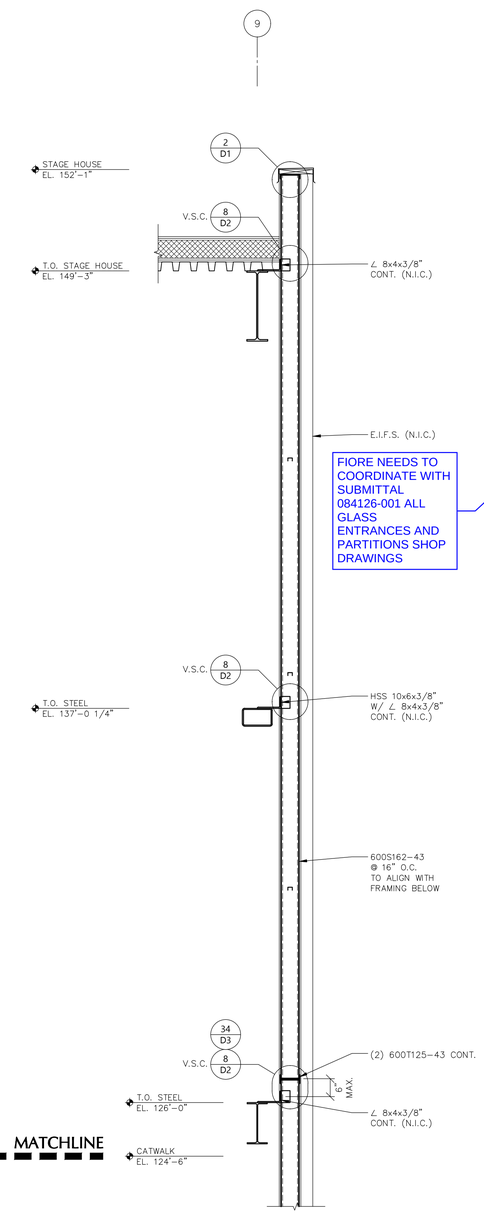

FIORE NEEDS TO COORDINATE WITH SUBMITTAL 084126-001 ALL GLASS ENTRANCES AND PARTITIONS SHOP DRAWINGS

SECTION NOTES:

1) ALL TRACK TO BE 1 1/4" FLANGE x 43 MILS, U.N.O.

2) REFER TO SHEET C2 FOR APPROVED FASTENERS (P.D.F.'s, SCREWS, CONCRETE ANCHORS, ETC.)

3) DIMENSIONS & ELEVATIONS ON EXCEL SHOP DRAWINGS ARE FOR REFERENCE ONLY. REFERENCE ARCHITECTURAL & STRUCTURAL.

4) A. STOREFRONTS & CURTAINWALLS ARE ASSUMED TO SPAN VERTICALLY WITH LOAD TRANSFER THROUGH THE VERTICAL MULLIONS. STUD FRAMING HAS BEEN DESIGNED UTILIZING CALCULATED MULLION LOADS PER PROJECT DESIGN CRITERIA. PROVIDE JAMB STUDS IN ACCORDANCE WITH STANDARD CONSTRUCTION PRACTICE.

   B. WINDOWS HAVE BEEN DESIGNED ASSUMING TRIBUTARY LOAD DISTRIBUTION TO HEADER, SILL & JAMB ELEMENTS.

5) ALL COLD FORMED STEEL FRAMING HAS BEEN DESIGNED FOR UNIFORM LOADS AND WALL CONSTRUCTION DEAD LOADS ONLY. (U.N.O.) THE WEIGHT OF ANY MASONRY VENEER IS ASSUMED TO BE SUPPORTED INDEPENDENT OF THE COLD FORMED STEEL FRAMING (U.N.O.) THE COLD FORMED STEEL FRAMING HAS BEEN DESIGNED TO LATERALLY SUPPORT ANY MASONRY.

6) ALL STUDS HAVE BEEN DESIGNED FOR UNIFORM LATERAL LOADS. METAL PANEL SYSTEM IS THEREFORE ASSUMED TO HAVE CONNECTIONS TO UNIFORMLY DISTRIBUTE LATERAL LOADING AND TO ISOLATE STUDS FROM ANY THERMAL MOVEMENT OF THE METAL PANEL SYSTEM. STUDS HAVE BEEN VALUE ENGINEERED. GC TO CONFIRM MINIMUM THICKNESS REQUIREMENTS WITH METAL PANEL MANUFACTURER.

7) TO PROVIDE FOR VERTICAL MOVEMENT (PER PROJECT SPECIFICATIONS) A DEFLECTION HEAD BY WINDOW MANUFACTURER WILL BE REQUIRED WHERE NOTED.

8) PROVIDE SHIMS AS REQUIRED AT CONNECTION LOCATIONS TO STRUCTURE. (SPECIFICALLY BEAM BOTTOM FLANGE SUPPORTS)

9) ALL HEADER & SILL MEMBERS MUST SPAN ENTIRE LENGTH OF OPENING W/O SPLICES.

10) SECTION PROPERTIES USED IN THIS SUBMITTAL ARE THOSE PUBLISHED BY SSMA/ SFIA/ CSSA.

Refer to RFI 060 for tube girt elevations

WALL SECTION 1/S1 (1)

SCALE: 1/2" = 1'-0"

REF.: 3/ A701 (ARCH)
REF.: 6/ S404 (CATWALK)
REF.: 4/ S407 (ROOF)

WALL SECTION 2/S1

SCALE: 1/2" = 1'-0"

REF.: 2/ A603 (ARCH)
REF.: 10/ S404 (CATWALK)
REF.: 9/ S406 (ROOF)

WALL SECTION 3/S1 (1)

SCALE: 1/2" = 1'-0"

REF.: 1/ A703 (ARCH)
REF.: 9/ S401 (STAGE)
REF.: 3/ S403 (STORAGE)
REF.: 2/ S405 (CATWALK)
REF.: 2/ S407 (HSS)
REF.: 7/ S407 (ROOF)

EXCEL
ARCHITECTS • ENGINEERS • SURVEYORS
Always a Better Plan
100 CAMELOT DRIVE
FOND DU LAC, WI 54935
PHONE: (920) 926-9800
WWW.EXCELENGINEER.COM

PROJECT INFORMATION

PROJECT CONTRACTOR
LEONARD S. FIORE, INC.
5506 6TH AVENUE
ALTOONA, PA 16602

COLD-FORMED STEEL SUBMITTAL FOR
GARRETT COLLEGE CEPAC
687 MOSSER ROAD • MCHENRY, MD 21541

PROJECT ENGINEER

ERIK JOHNSON
E-MAIL: Erik.J@ExcelEngineer.com
DRAWN BY: AEB

PROFESSIONAL SEAL

STATE OF MARYLAND
KARL SCHERZER
No. 30311
PROFESSIONAL ENGINEER

SUBMITTAL DATES

ISSUE DATE	AUG. 20, 2020
REVISIONS	
1	MAR. 12, 2021

PROJECT NUMBER
2030860

SHEET INFORMATION

SHEET NUMBER
S1

2020 © EXCEL ENGINEERING, INC.

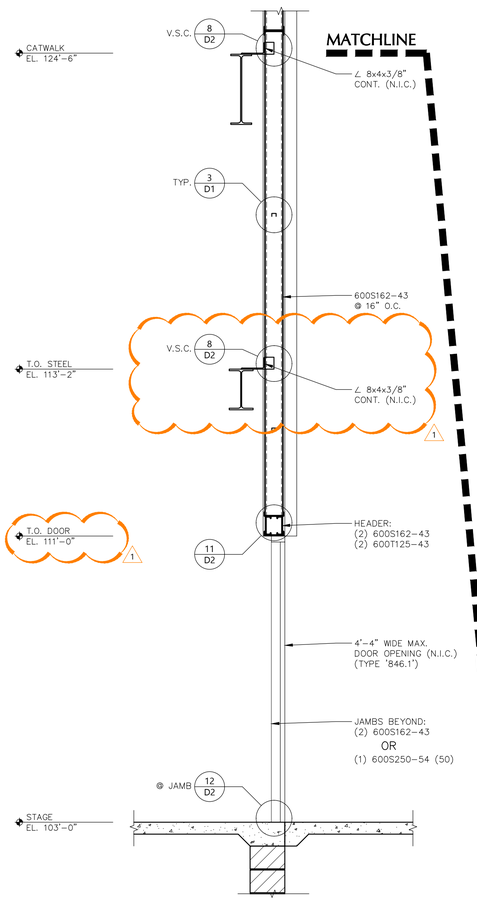

@ DOOR '846.1'

WALL SECTION 4/S2

SCALE: 1/2" = 1'-0"

SIM.: 1/ A703 (ARCH)
SIM.: 9/ S401 (STAGE)
REF.: 2/ S405 (LOW BEAM)
REF.: 2/ S405 (CATWALK)
REF.: 2/ S407 (HSS)
REF.: 7/ S407 (ROOF)

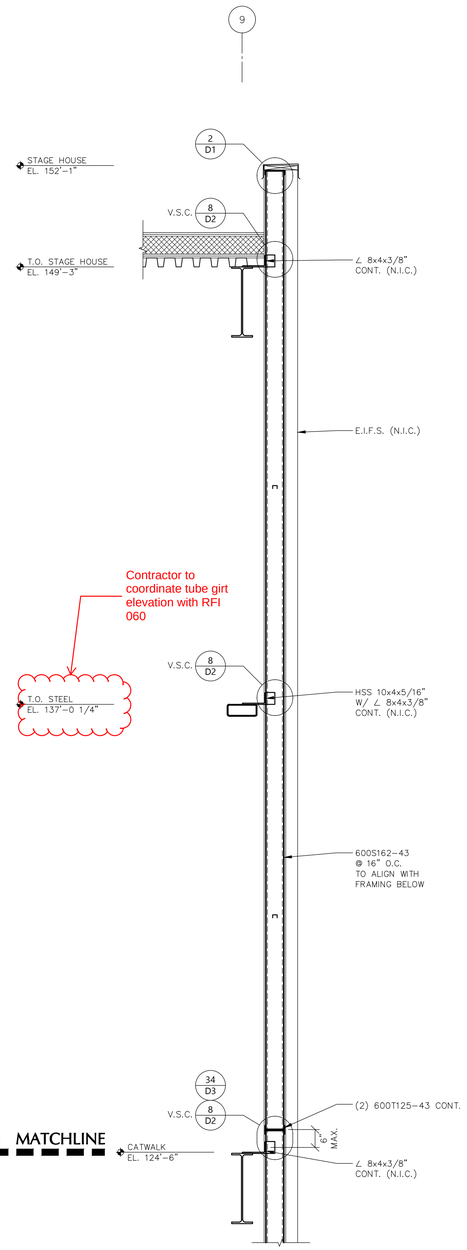

WALL SECTION 5/S2

SCALE: 1/2" = 1'-0"

REF.: 1/ A703 (ARCH)
REF.: 1/ S405 (LOW BEAM)
REF.: 2/ S407 (HSS)
REF.: 7/ S407 (ROOF)

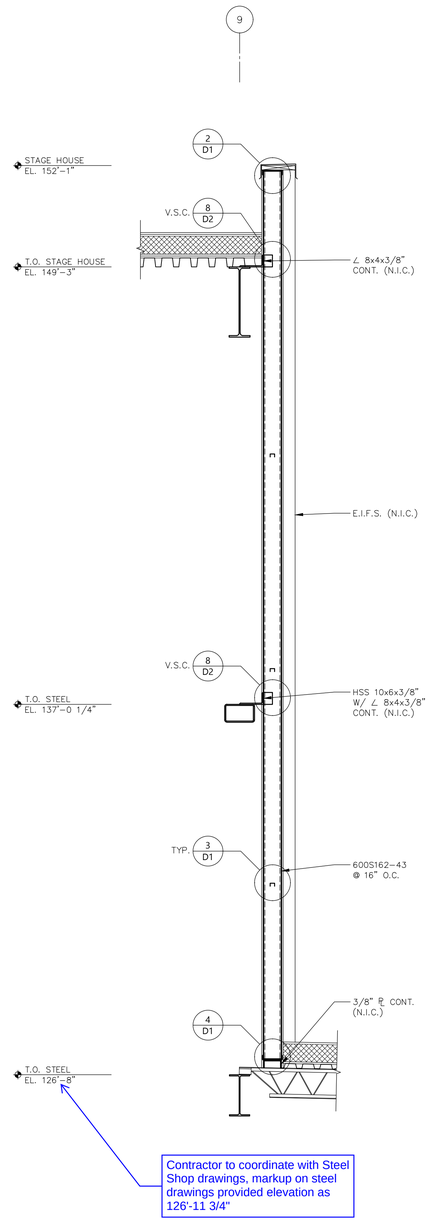

WALL SECTION 5/S2

SCALE: 1/2" = 1'-0"

REF.: 1/ A703 (ARCH)
REF.: 1/ S405 (LOW BEAM)
REF.: 2/ S407 (HSS)
REF.: 7/ S407 (ROOF)

Contractor to note:Deck bearing elevation has been revised because of change in joist seat depth. ~~Arch. to verify revised deck bearing elevation.~~

contractor to verify revised deck bearing elevation

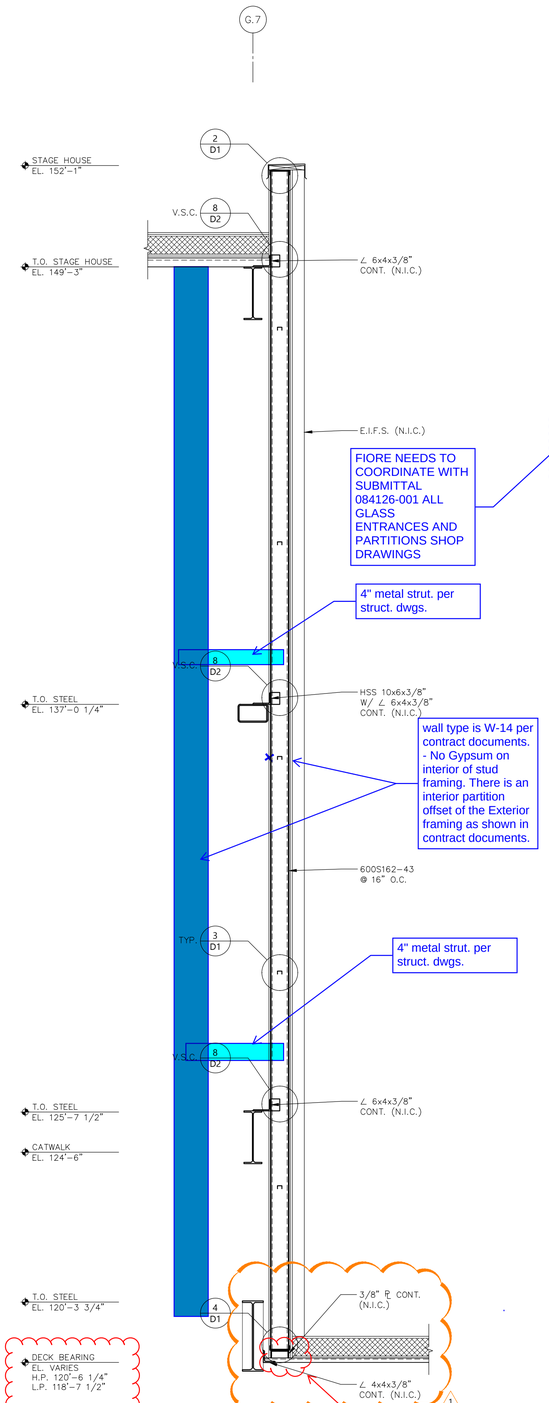

WALL SECTION 6/S2

SCALE: 1/2" = 1'-0"

REF.: 3 & 4/ A603 (ARCH)
REF.: 5/ S404 (CATWALK)
REF.: 1/ S407 (HSS)
REF.: 6/ S407 (ROOF)

Contractor to note: Deck bearing elevation varies. Refer to 7/S409 (deck to bear 2 1/2" above top of steel). Refer to 8/S409 (deck to bear 3 1/2" above top of steel).

Contractor to coordinate with sections 5/S404 and 3/S404. At section 5/S404 (when deck changes direction), the stud shall be supported directly by the deck. There is no continuous bent plate in 5/S404

SECTION NOTES:

1) ALL TRACK TO BE 1 1/4" FLANGE x 43 MILS, U.N.O.

2) REFER TO SHEET C2 FOR APPROVED FASTENERS (P.D.F.'s, SCREWS, CONCRETE ANCHORS, ETC.)

3) DIMENSIONS & ELEVATIONS ON EXCEL SHOP DRAWINGS ARE FOR REFERENCE ONLY. REFERENCE ARCHITECTURAL & STRUCTURAL.

4) A. STOREFRONTS & CURTAINWALLS ARE ASSUMED TO SPAN VERTICALLY WITH LOAD TRANSFER THROUGH THE VERTICAL MULLIONS. STUD FRAMING HAS BEEN DESIGNED UTILIZING CALCULATED MULLION LOADS PER PROJECT DESIGN CRITERIA. PROVIDE JAMB STUDS IN ACCORDANCE WITH STANDARD CONSTRUCTION PRACTICE.

B. WINDOWS HAVE BEEN DESIGNED ASSUMING TRIBUTARY LOAD DISTRIBUTION TO HEADER, SILL & JAMB ELEMENTS.

5) ALL COLD FORMED STEEL FRAMING HAS BEEN DESIGNED FOR UNIFORM LOADS AND WALL CONSTRUCTION DEAD LOADS ONLY. (U.N.O.) THE WEIGHT OF ANY MASONRY VENEER IS ASSUMED TO BE SUPPORTED INDEPENDENT OF THE COLD FORMED STEEL FRAMING (U.N.O.) THE COLD FORMED STEEL FRAMING HAS BEEN DESIGNED TO LATERALLY SUPPORT ANY MASONRY.

6) ALL STUDS HAVE BEEN DESIGNED FOR UNIFORM LATERAL LOADS. METAL PANEL SYSTEM IS THEREFORE ASSUMED TO HAVE CONNECTIONS TO UNIFORMLY DISTRIBUTE LATERAL LOADING AND TO ISOLATE STUDS FROM ANY THERMAL MOVEMENT OF THE METAL PANEL SYSTEM. STUDS HAVE BEEN VALUE ENGINEERED. GC TO CONFIRM MINIMUM THICKNESS REQUIREMENTS WITH METAL PANEL MANUFACTURER.

7) TO PROVIDE FOR VERTICAL MOVEMENT (PER PROJECT SPECIFICATIONS) A DEFLECTION HEAD BY WINDOW MANUFACTURER WILL BE REQUIRED WHERE NOTED.

8) ~~PROVIDE CONTROL JOINTS AT ALL~~ CONNECTION LOCATIONS TO STRUCTURE. (SPECIFICALLY BEAM BOTTOM FLANGE SUPPORTS)

9) ALL HEADER & SILL MEMBERS MUST SPAN ENTIRE LENGTH OF OPENING W/O SPLICES.

10) SECTION PROPERTIES USED IN THIS SUBMITTAL ARE THOSE PUBLISHED BY SSMA/ SFIA/ CSSA.

EXCEL
ARCHITECTS • ENGINEERS • SURVEYORS
Always a Better Plan
100 CAMELOT DRIVE
FOND DU LAC, WI 54935
PHONE: (920) 926-9800
WWW.EXCELENGINEER.COM

PROJECT INFORMATION

PROJECT CONTRACTOR
LEONARD S. FIORE, INC.
5506 6TH AVENUE
ALTOONA, PA 16602

COLD-FORMED STEEL SUBMITTAL FOR
GARRETT COLLEGE CEPAC
687 MOSSER ROAD • MCHENRY, MD 21541

PROJECT ENGINEER

ERIK JOHNSON
E-MAIL: Erik.J@ExcelEngineer.com
DRAWN BY: AEB

PROFESSIONAL SEAL

SUBMITTAL DATES

ISSUE DATE	AUG. 20, 2020
REVISIONS	
1	MAR. 12, 2021

PROJECT NUMBER

2030860

SHEET INFORMATION

SHEET NUMBER

S2

2020 © EXCEL ENGINEERING, INC.

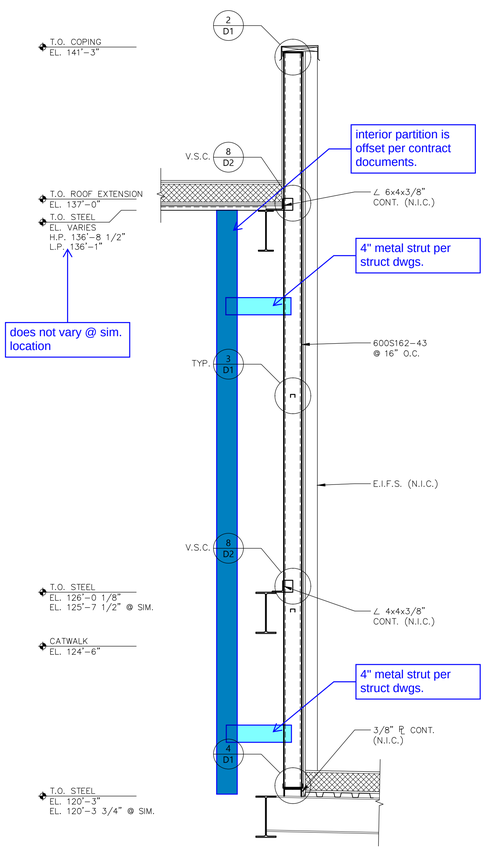

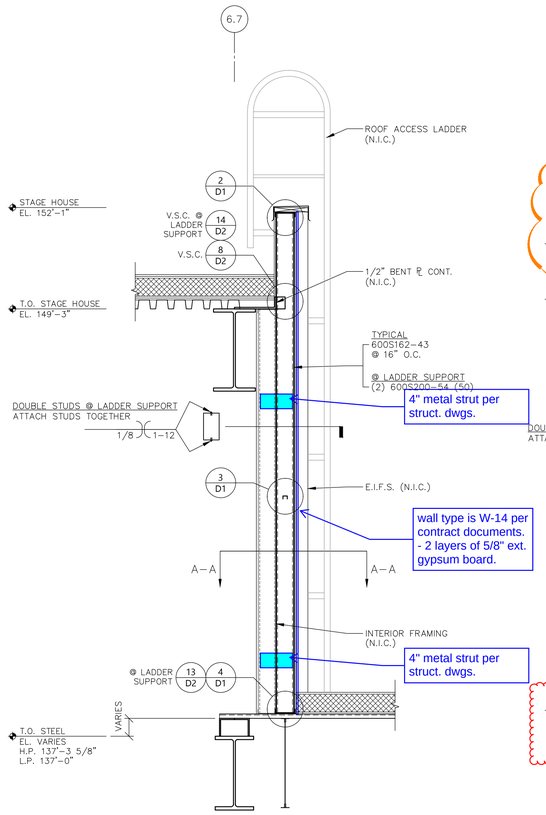

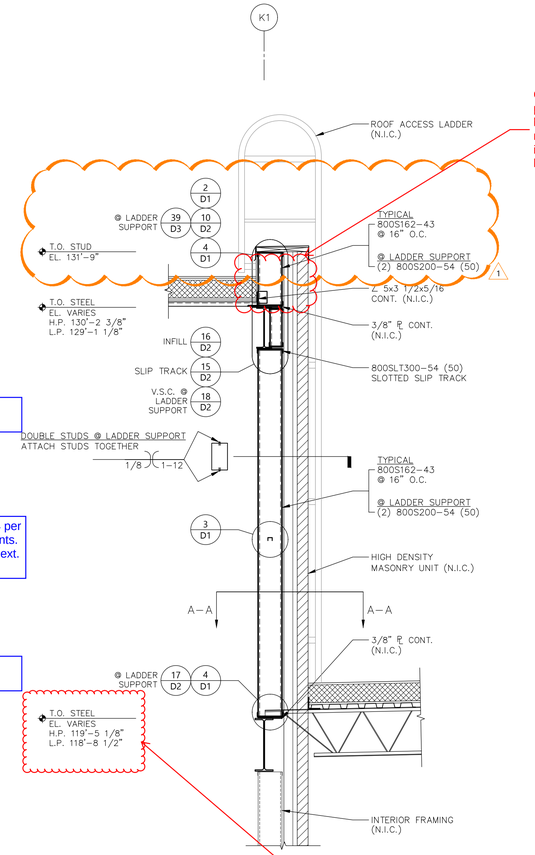

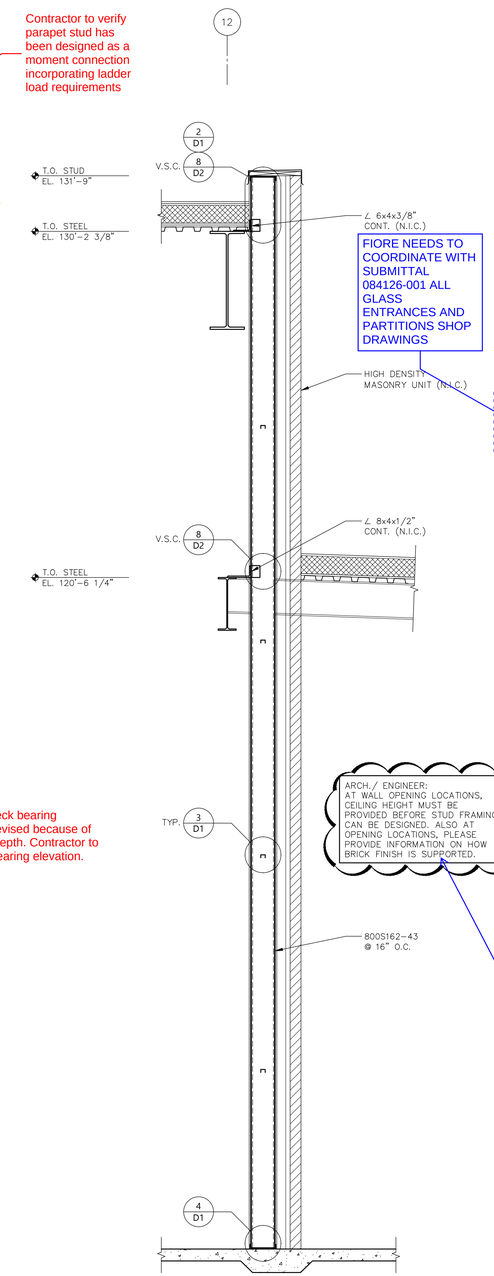

SECTION NOTES:

1) ALL TRACK TO BE 1 1/4" FLANGE x 43 MILS, U.N.O.

2) REFER TO SHEET C2 FOR APPROVED FASTENERS (P.D.F.'s, SCREWS, CONCRETE ANCHORS, ETC.)

3) DIMENSIONS & ELEVATIONS ON EXCEL SHOP DRAWINGS ARE FOR REFERENCE ONLY. REFERENCE ARCHITECTURAL & STRUCTURAL.

4) A. STOREFRONTS & CURTAINWALLS ARE ASSUMED TO SPAN VERTICALLY WITH LOAD TRANSFER THROUGH THE VERTICAL MULLIONS. STUD FRAMING HAS BEEN DESIGNED UTILIZING CALCULATED MULLION LOADS PER PROJECT DESIGN CRITERIA. PROVIDE JAMB STUDS IN ACCORDANCE WITH STANDARD CONSTRUCTION PRACTICE.

B. WINDOWS HAVE BEEN DESIGNED ASSUMING TRIBUTARY LOAD DISTRIBUTION TO HEADER, SILL & JAMB ELEMENTS.

5) ALL COLD FORMED STEEL FRAMING HAS BEEN DESIGNED FOR UNIFORM LOADS AND WALL CONSTRUCTION DEAD LOADS ONLY. (U.N.O.) THE WEIGHT OF ANY MASONRY VENEER IS ASSUMED TO BE SUPPORTED INDEPENDENT OF THE COLD FORMED STEEL FRAMING (U.N.O.) THE COLD FORMED STEEL FRAMING HAS BEEN DESIGNED TO LATERALLY SUPPORT ANY MASONRY.

6) ALL STUDS HAVE BEEN DESIGNED FOR UNIFORM LATERAL LOADS. METAL PANEL SYSTEM IS THEREFORE ASSUMED TO HAVE CONNECTIONS TO UNIFORMLY DISTRIBUTE LATERAL LOADING AND TO ISOLATE STUDS FROM ANY THERMAL MOVEMENT OF THE METAL PANEL SYSTEM. STUDS HAVE BEEN VALUE ENGINEERED. GC TO CONFIRM MINIMUM THICKNESS REQUIREMENTS WITH METAL PANEL MANUFACTURER.

7) TO PROVIDE FOR VERTICAL MOVEMENT (PER PROJECT SPECIFICATIONS) A DEFLECTION HEAD BY WINDOW MANUFACTURER WILL BE REQUIRED WHERE NOTED.

8) PROVIDE SHIMS TO ADJUST CONNECTION LOCATIONS TO STRUCTURE. (SPECIFICALLY BEAM BOTTOM FLANGE SUPPORTS)

9) ALL HEADER & SILL MEMBERS MUST SPAN ENTIRE LENGTH OF OPENING W/O SPLICES.

10) SECTION PROPERTIES USED IN THIS SUBMITTAL ARE THOSE PUBLISHED BY SSMA/ SFIA/ CSSA.

DESIGN CRITERIA NOTE:
LADDER SUPPORT JAMBS HAVE BEEN DESIGNED TO RESIST A CONCENTRATED LIVE LOAD OF 1.33 kN (300 POUNDS) AT ANY POINT TO PRODUCE THE MAXIMUM LOAD EFFECT. THE NUMBER AND POSITION OF ADDITIONAL CONCENTRATED LIVE LOAD UNITS ARE A MINIMUM OF 1 UNIT OF 1.33 kN (300 POUNDS) FOR EVERY 3.048 m (10 FT) OF LADDER HEIGHT. WHERE RAILS OF FIXED LADDERS EXTEND ABOVE A FLOOR OR PLATFORM AT THE TOP OF THE LADDER, EACH LADDER SUPPORT JAMB HAS BEEN DESIGNED TO RESIST A CONCENTRATED LIVE LOAD OF 0.445 kN (100 POUNDS) IN ANY DIRECTION AT ANY HEIGHT UP TO THE TOP OF THE SIDE RAIL EXTENSION.
PROJECT A/E TO PROVIDE LOADS IF DIFFERENT FROM STATED.

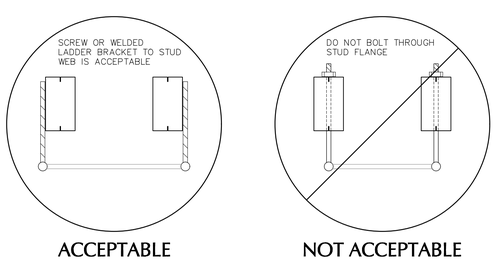

PLAN A-A

WALL SECTION 7/S3
SCALE: 1/2" = 1'-0"
REF.: 2/ A703 (ARCH)
REF.: 2/ A701 (ARCH) @ SIM.
REF.: 4/ S405 (CATWALK)
REF.: 3/ S404 (CATWALK) @ SIM.
REF.: 10/ S406 (ROOF)
REF.: 12/ S406 (ROOF) @ SIM.

WALL SECTION 8/S3
SCALE: 1/2" = 1'-0"
REF.: 2/ A702 (ARCH)
REF.: 3/ S407 (LOW ROOF)
REF.: 5/ S407 (HIGH ROOF)

WALL SECTION 9/S3 1
SCALE: 1/2" = 1'-0"
REF.: 4/ A601 (ARCH)
REF.: 15/ S405 (LOW ROOF)
REF.: 6/ S406 (HIGH ROOF)

WALL SECTION 10/S3 1
SCALE: 1/2" = 1'-0"
REF.: 3/ A601 (ARCH)
REF.: 13/ S405 (LOW ROOF)
REF.: 3/ S406 (HIGH ROOF)

EXCEL
ARCHITECTS • ENGINEERS • SURVEYORS
Always a Better Plan
100 CAMELOT DRIVE
FOND DU LAC, WI 54935
PHONE: (920) 926-9800
WWW.EXCELENGINEER.COM

PROJECT INFORMATION

PROJECT CONTRACTOR
LEONARD S. FIORE, INC.
5506 6TH AVENUE
ALTOONA, PA 16602

COLD-FORMED STEEL SUBMITTAL FOR
GARRETT COLLEGE CEPAC
687 MOSSER ROAD • MCHENRY, MD 21541

PROJECT ENGINEER
ERIK JOHNSON
E-MAIL: Erik.J@ExcelEngineer.com
DRAWN BY: AEB

PROFESSIONAL SEAL
STATE OF MARYLAND
KARL SCHERZER
No. 30311
PROFESSIONAL ENGINEER

SUBMITTAL DATES
ISSUE DATE AUG. 20, 2020
REVISIONS
1 MAR. 12, 2021

PROJECT NUMBER
2030860

SHEET INFORMATION
SHEET NUMBER
S3

2020 © EXCEL ENGINEERING, INC.

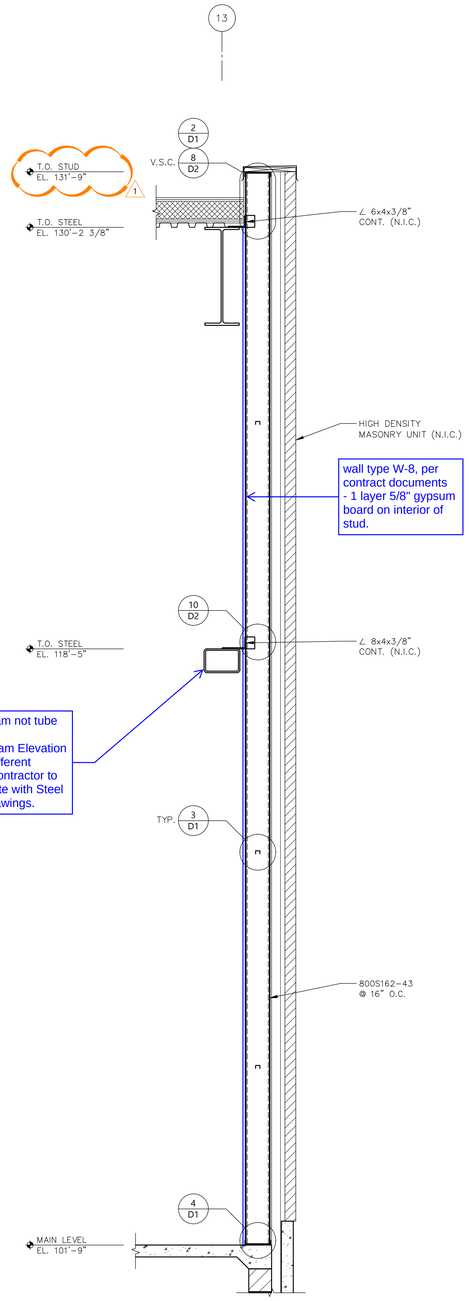

WALL SECTION 11 S4

SCALE: 1/2" = 1'-0"

REF.: 3/ A601 (ARCH)
REF.: 2/ S401 (FDN)
REF.: 14/ S405 (HSS)
REF.: 3/ S406 (ROOF)

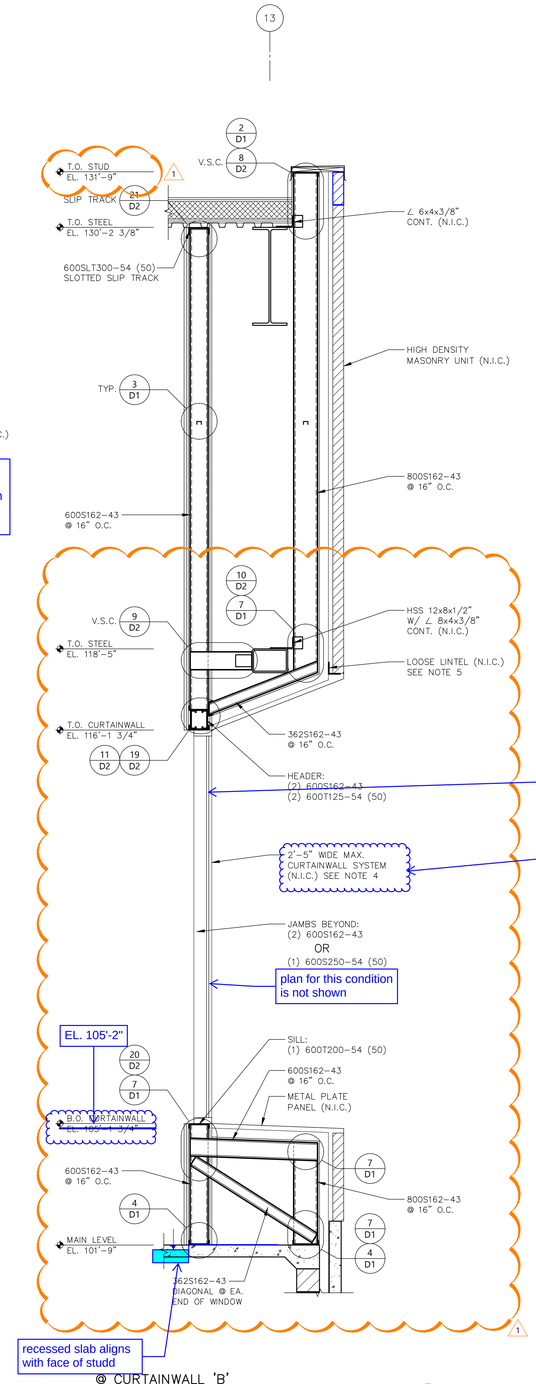

@ CURTAINWALL 'B'
WALL SECTION 12 S4

SCALE: 1/2" = 1'-0"

REF.: 4 & 7/ A723 (ARCH)
REF.: 2/ S401 (FDN)
REF.: 14/ S405 (HSS)
REF.: 3/ S406 (ROOF)

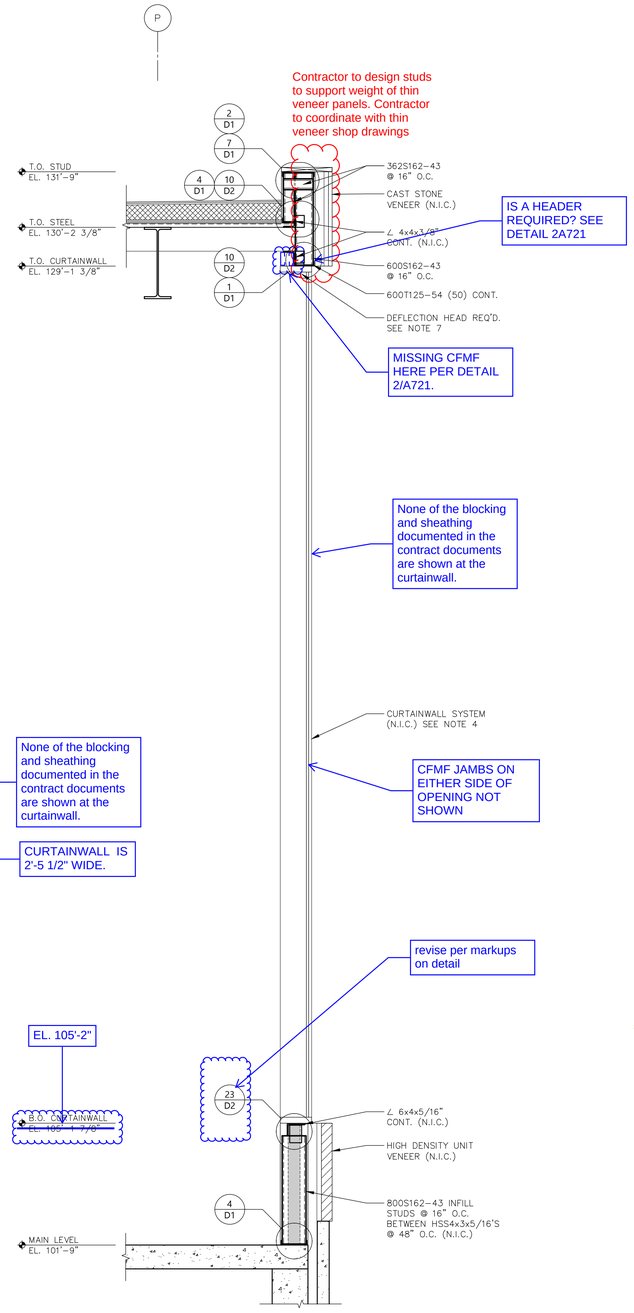

@ CURTAINWALL 'A'
WALL SECTION 13 S4

SCALE: 1/2" = 1'-0"

REF.: 1 & 2/ A721 (ARCH)
REF.: 1/ S401 (FDN)
REF.: 5/ S406 (ROOF)

NOT USED

@ WING WALL
WALL SECTION 14 S4

SCALE: 1/2" = 1'-0"

REF.: 4/ A724 (ARCH)
REF.: 2/ S410 (FDN)
SIM.: 5/ S406 (ROOF)

SECTION NOTES:

1) ALL TRACK TO BE 1 1/4" FLANGE x 43 MILS, U.N.O.

2) REFER TO SHEET C2 FOR APPROVED FASTENERS (P.D.F.'s, SCREWS, CONCRETE ANCHORS, ETC.)

3) DIMENSIONS & ELEVATIONS ON EXCEL SHOP DRAWINGS ARE FOR REFERENCE ONLY. REFERENCE ARCHITECTURAL & STRUCTURAL.

4) A. STOREFRONTS & CURTAINWALLS ARE ASSUMED TO SPAN VERTICALLY WITH LOAD TRANSFER THROUGH THE VERTICAL MULLIONS. STUD FRAMING HAS BEEN DESIGNED UTILIZING CALCULATED MULLION LOADS PER PROJECT DESIGN CRITERIA. PROVIDE JAMB STUDS IN ACCORDANCE WITH STANDARD CONSTRUCTION PRACTICE.

B. WINDOWS HAVE BEEN DESIGNED ASSUMING TRIBUTARY LOAD DISTRIBUTION TO HEADER, SILL & JAMB ELEMENTS.

5) ALL COLD FORMED STEEL FRAMING HAS BEEN DESIGNED FOR UNIFORM LOADS AND WALL CONSTRUCTION DEAD LOADS ONLY. (U.N.O.) THE WEIGHT OF ANY MASONRY VENEER IS ASSUMED TO BE SUPPORTED INDEPENDENT OF THE COLD FORMED STEEL FRAMING (U.N.O.) THE COLD FORMED STEEL FRAMING HAS BEEN DESIGNED TO LATERALLY SUPPORT ANY MASONRY.

6) ALL STUDS HAVE BEEN DESIGNED FOR UNIFORM LATERAL LOADS. METAL PANEL SYSTEM IS THEREFORE ASSUMED TO HAVE CONNECTIONS TO UNIFORMLY DISTRIBUTE LATERAL LOADING AND TO ISOLATE STUDS FROM ANY THERMAL MOVEMENT OF THE METAL PANEL SYSTEM. STUDS HAVE BEEN VALUE ENGINEERED. GC TO CONFIRM MINIMUM THICKNESS REQUIREMENTS WITH METAL PANEL MANUFACTURER.

7) TO PROVIDE FOR VERTICAL MOVEMENT (PER PROJECT SPECIFICATIONS) A DEFLECTION HEAD BY WINDOW MANUFACTURER WILL BE REQUIRED WHERE NOTED.

8) PROVIDE SHIMS TO ADJUST CONNECTION LOCATIONS TO STRUCTURE. (SPECIFICALLY BEAM BOTTOM FLANGE SUPPORTS)

9) ALL HEADER & SILL MEMBERS MUST SPAN ENTIRE LENGTH OF OPENING W/O SPLICES.

10) SECTION PROPERTIES USED IN THIS SUBMITTAL ARE THOSE PUBLISHED BY SSMA/ SFIA/ CSSA.

FIORE NEEDS TO COORDINATE WITH SUBMITTAL 084126-001 ALL GLASS ENTRANCES AND PARTITIONS SHOP DRAWINGS

EXCEL
ARCHITECTS • ENGINEERS • SURVEYORS
Always a Better Plan
100 CAMELOT DRIVE
FOND DU LAC, WI 54935
PHONE: (920) 926-9800
WWW.EXCELENGINEER.COM

PROJECT INFORMATION

PROJECT CONTRACTOR
LEONARD S. FIORE, INC.
5506 6TH AVENUE
ALTOONA, PA 16602

COLD-FORMED STEEL SUBMITTAL FOR
GARRETT COLLEGE CEPAC
687 MOSSER ROAD • MCHENRY, MD 21541

PROJECT ENGINEER
ERIK JOHNSON
E-MAIL: Erik.J@ExcelEngineer.com
DRAWN BY: AEB

PROFESSIONAL SEAL
STATE OF MARYLAND
KARL SCHERZER
No. 30911
PROFESSIONAL ENGINEER

SUBMITTAL DATES
ISSUE DATE AUG. 20, 2020
REVISIONS
1 MAR. 12, 2021

PROJECT NUMBER
2030860

SHEET INFORMATION
SHEET NUMBER
S4

2020 © EXCEL ENGINEERING, INC.

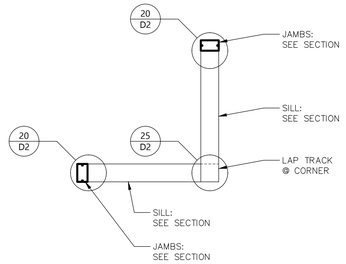

PLAN A–A

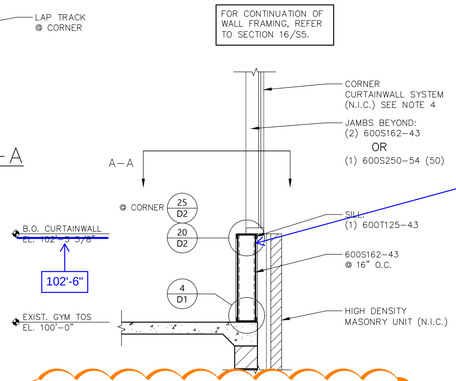

None of the blocking and sheathing documented in the contract documents are shown at the curtainwall.

@ CORNER CURTAINWALLS 'G' & 'H'
WALL SECTION 16A S5
SCALE: 1/2" = 1'–0"
SIM.: 1/ A704 (ARCH)
REF.: 10/ A722 (ARCH)
REF.: 1/ S402 (FDN)
REF.: 6 & 7/ S403 (ROOF)

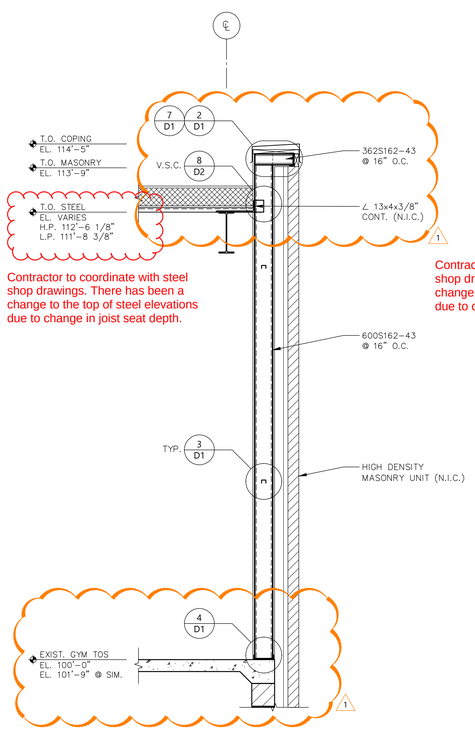

Contractor to coordinate with steel shop drawings. There has been a change to the top of steel elevations due to change in joist seat depth.

WALL SECTION 15 S5
SCALE: 1/2" = 1'–0"
REF.: 1/ A704 (ARCH)
REF.: 1/ S402 (FDN)
REF.: 6 & 7/ S403 (ROOF)

IS NO HEADER REQUIRED? HEADER IS SHOWN ON DETAIL 10/A722.

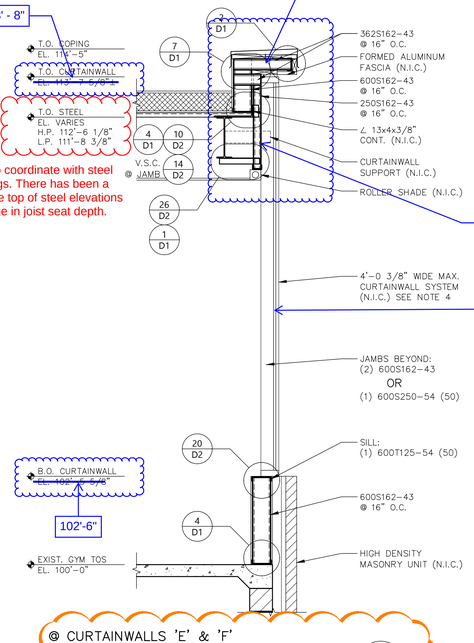

Contractor to coordinate with steel shop drawings. There has been a change to the top of steel elevations due to change in joist seat depth.

provide space between CFMF and back of curtainwall per detail 10/A722

None of the blocking and sheathing documented in the contract documents are shown at the curtainwall.

@ CURTAINWALLS 'E' & 'F'
WALL SECTION 16 S5
SCALE: 1/2" = 1'–0"
SIM.: 1/ A704 (ARCH)
REF.: 10/ A722 (ARCH)
REF.: 1/ S402 (FDN)
REF.: 6 & 7/ S403 (ROOF)

THERE IS A THERMAL BREAK BEAM CONNECTION - REFERENCE STRUCTURAL DETAIL 1/S406

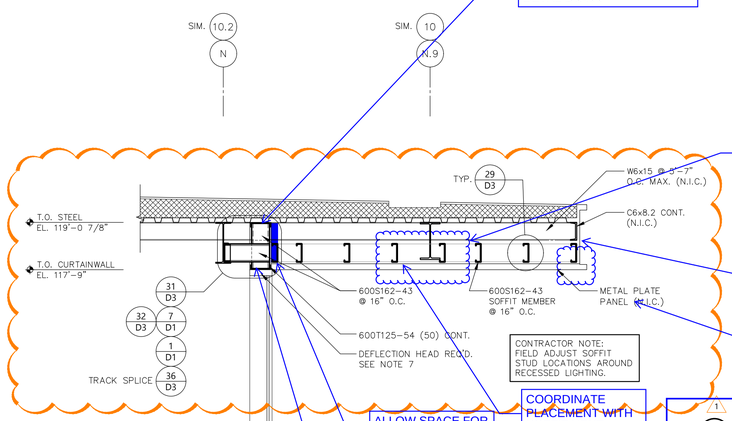

CONTRACTOR NOTE:
FIELD ADJUST SOFFIT STUD LOCATIONS AROUND RECESSED LIGHTING.

THE INTENT WAS THIS WOULD BE A 2 1/2" CFMF.

FIORE TO CONFIRM THIS STUD SIZE WORKS WITH STEEL FRAMING.

CFMF NEEDS TO SUPPORT FASCIA AS SHOWN ON ARCH DETAIL 1 & 2/A720

EIFS SOFFIT NOT METAL PLATE PANEL

COORDINATE PLACEMENT WITH SOFFIT VENT

ALLOW SPACE FOR RIGID INSULATION TO BE INSTALLED PER DETAIL 2/A720

IS NO HEADER REQUIRED? HEADER IS SHOWN ON DETAIL 2/A720

CURTAINWALL SYSTEM
(N.I.C.) SEE NOTE 4

None of the blocking and sheathing documented in the contract documents are shown at the curtainwall.

Revise height per detail 12/A720,

REVISE PER MARKUP ON DETAIL

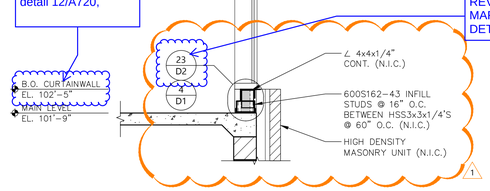

@ CURTAINWALLS 'J' & 'K'
WALL SECTION 17 S5
SCALE: 1/2" = 1'–0"
REF.: 2/ A704 (ARCH)
REF.: 5/ S401 (FDN)
SIM.: 1/ S406 (ROOF)

FIORE NEEDS TO COORDINATE WITH SUBMITTAL 084126-001 ALL GLASS ENTRANCES AND PARTITIONS SHOP DRAWINGS

SECTION NOTES:

1) ALL TRACK TO BE 1 1/4" FLANGE x 43 MILS, U.N.O.

2) REFER TO SHEET C2 FOR APPROVED FASTENERS (P.D.F.'s, SCREWS, CONCRETE ANCHORS, ETC.)

3) DIMENSIONS & ELEVATIONS ON EXCEL SHOP DRAWINGS ARE FOR REFERENCE ONLY. REFERENCE ARCHITECTURAL & STRUCTURAL.

4) A. STOREFRONTS & CURTAINWALLS ARE ASSUMED TO SPAN VERTICALLY WITH LOAD TRANSFER THROUGH THE VERTICAL MULLIONS. STUD FRAMING HAS BEEN DESIGNED UTILIZING CALCULATED MULLION LOADS PER PROJECT DESIGN CRITERIA. PROVIDE JAMB STUDS IN ACCORDANCE WITH STANDARD CONSTRUCTION PRACTICE.

B. WINDOWS HAVE BEEN DESIGNED ASSUMING TRIBUTARY LOAD DISTRIBUTION TO HEADER, SILL & JAMB ELEMENTS.

5) ALL COLD FORMED STEEL FRAMING HAS BEEN DESIGNED FOR UNIFORM LOADS AND WALL CONSTRUCTION DEAD LOADS ONLY. (U.N.O.) THE WEIGHT OF ANY MASONRY VENEER IS ASSUMED TO BE SUPPORTED INDEPENDENT OF THE COLD FORMED STEEL FRAMING (U.N.O.) THE COLD FORMED STEEL FRAMING HAS BEEN DESIGNED TO LATERALLY SUPPORT ANY MASONRY.

6) ALL STUDS HAVE BEEN DESIGNED FOR UNIFORM LATERAL LOADS. METAL PANEL SYSTEM IS THEREFORE ASSUMED TO HAVE CONNECTIONS TO UNIFORMLY DISTRIBUTE LATERAL LOADING AND TO ISOLATE STUDS FROM ANY THERMAL MOVEMENT OF THE METAL PANEL SYSTEM. STUDS HAVE BEEN VALUE ENGINEERED. GC TO CONFIRM MINIMUM THICKNESS REQUIREMENTS WITH METAL PANEL MANUFACTURER.

7) TO PROVIDE FOR VERTICAL MOVEMENT (PER PROJECT SPECIFICATIONS) A DEFLECTION HEAD BY WINDOW MANUFACTURER WILL BE REQUIRED WHERE NOTED.

8) PROVIDE SHIMS AS REQUIRED AT CONNECTION LOCATIONS TO STRUCTURE. (SPECIFICALLY BEAM BOTTOM FLANGE SUPPORTS)

9) ALL HEADER & SILL MEMBERS MUST SPAN ENTIRE LENGTH OF OPENING W/O SPLICES.

10) SECTION PROPERTIES USED IN THIS SUBMITTAL ARE THOSE PUBLISHED BY SSMA/ SFIA/ CSSA.

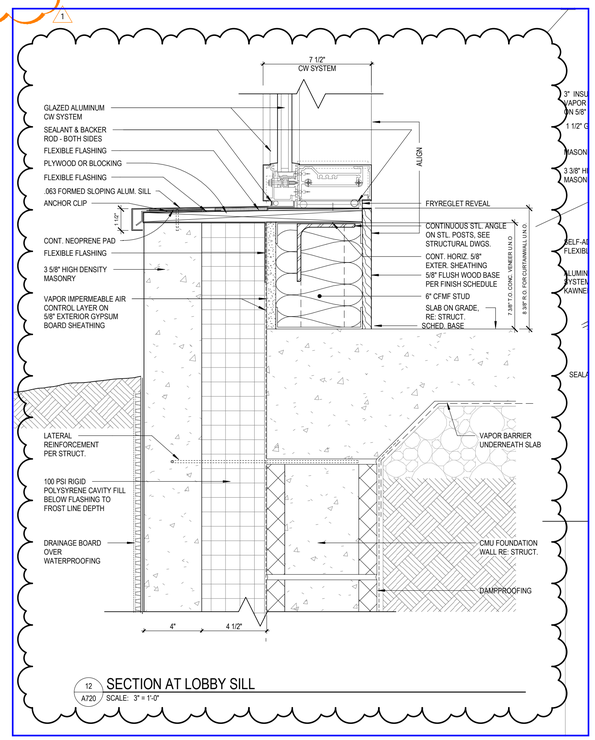

12 / A720 SECTION AT LOBBY SILL
SCALE: 3" = 1'-0"

EXCEL
ARCHITECTS • ENGINEERS • SURVEYORS
Always a Better Plan
100 CAMELOT DRIVE
FOND DU LAC, WI 54935
PHONE: (920) 926-9800
WWW.EXCELENGINEER.COM

PROJECT INFORMATION

PROJECT CONTRACTOR
LEONARD S. FIORE, INC.
5506 6TH AVENUE
ALTOONA, PA 16602

COLD-FORMED STEEL SUBMITTAL FOR
GARRETT COLLEGE CEPAC
687 MOSSER ROAD • MCHENRY, MD 21541

PROJECT ENGINEER
ERIK JOHNSON
E-MAIL: Erik.J@ExcelEngineer.com
DRAWN BY: AEB

PROFESSIONAL SEAL
STATE OF MARYLAND
KARL SCHENZEL
No. 30311
PROFESSIONAL ENGINEER

SUBMITTAL DATES
ISSUE DATE AUG. 20, 2020
REVISIONS
1 MAR. 12, 2021

PROJECT NUMBER
2030860

SHEET INFORMATION
SHEET NUMBER
S5

2020 © EXCEL ENGINEERING, INC.

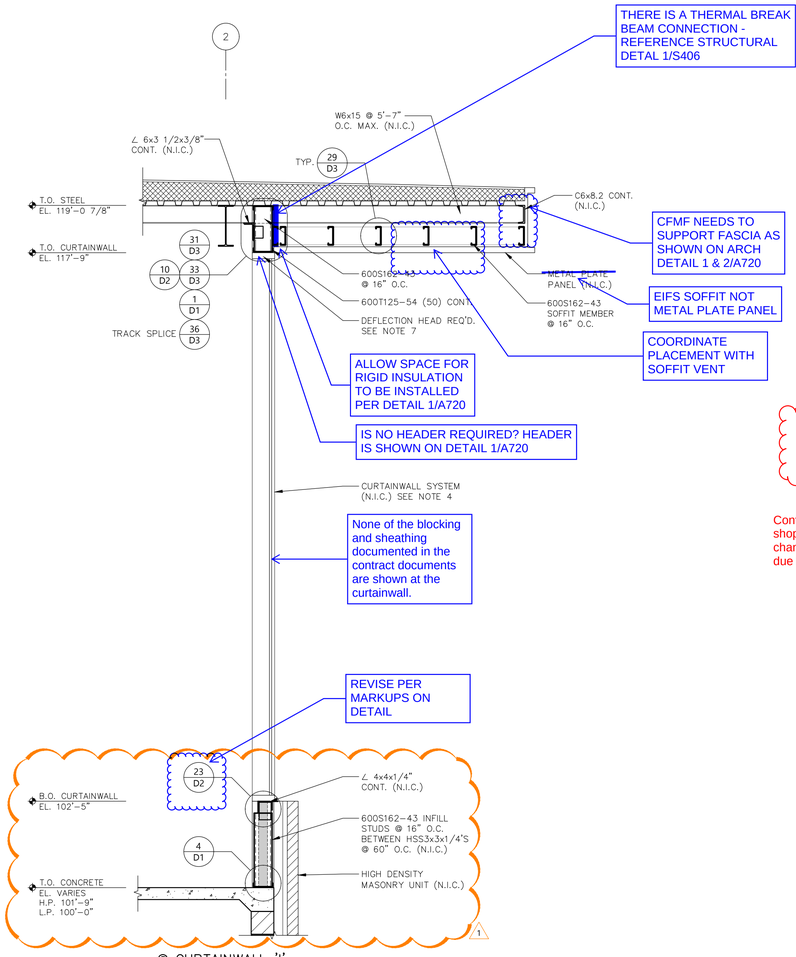

@ CURTAINWALL 'I'

WALL SECTION

SCALE: 1/2" = 1'-0"

REF.: 2/ A703 (ARCH)
REF.: 5/ S401 (FDN)
REF.: 16/ S405 (ROOF)

18 / S6 (1)

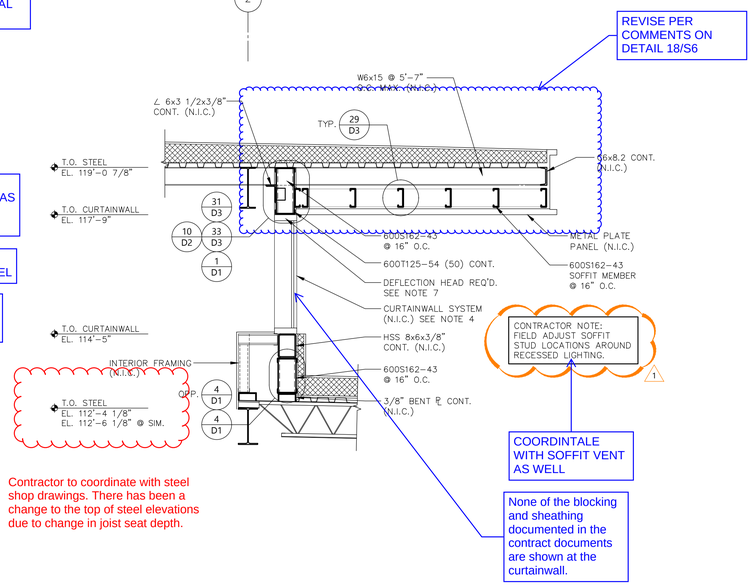

Contractor to coordinate with steel shop drawings. There has been a change to the top of steel elevations due to change in joist seat depth.

@ CURTAINWALL 'I' & 'L'

WALL SECTION

SCALE: 1/2" = 1'-0"

REF.: 1/ A704 (ARCH)
~~REF.: 5/ S401 (FDN)~~
REF.: 16/ S405 (ROOF)

19 / S6 (1)

&7/A721, 9/S403

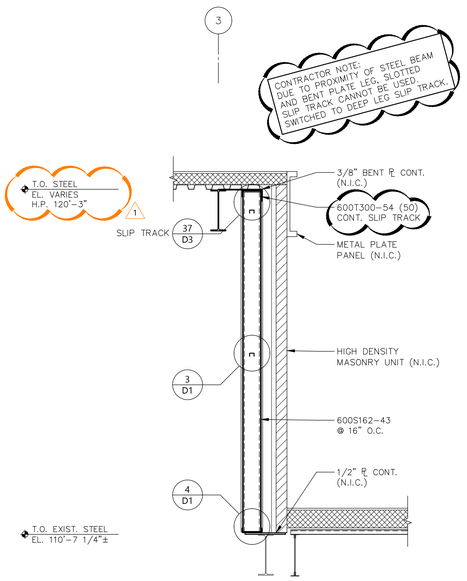

@ ROOF TRANSITION

WALL SECTION

SCALE: 1/2" = 1'-0"

REF.: 5/ S409 (LOW ROOF)
REF.: 5/ S410 (HIGH ROOF)

20 / S6 (1)

SECTION NOTES:

1) ALL TRACK TO BE 1 1/4" FLANGE x 43 MILS, U.N.O.

2) REFER TO SHEET C2 FOR APPROVED FASTENERS (P.D.F.'s, SCREWS, CONCRETE ANCHORS, ETC.)

3) DIMENSIONS & ELEVATIONS ON EXCEL SHOP DRAWINGS ARE FOR REFERENCE ONLY. REFERENCE ARCHITECTURAL & STRUCTURAL.

4) A. STOREFRONTS & CURTAINWALLS ARE ASSUMED TO SPAN VERTICALLY WITH LOAD TRANSFER THROUGH THE VERTICAL MULLIONS. STUD FRAMING HAS BEEN DESIGNED UTILIZING CALCULATED MULLION LOADS PER PROJECT DESIGN CRITERIA. PROVIDE JAMB STUDS IN ACCORDANCE WITH STANDARD CONSTRUCTION PRACTICE.

   B. WINDOWS HAVE BEEN DESIGNED ASSUMING TRIBUTARY LOAD DISTRIBUTION TO HEADER, SILL & JAMB ELEMENTS.

5) ALL COLD FORMED STEEL FRAMING HAS BEEN DESIGNED FOR UNIFORM LOADS AND WALL CONSTRUCTION DEAD LOADS ONLY. (U.N.O.) THE WEIGHT OF ANY MASONRY VENEER IS ASSUMED TO BE SUPPORTED INDEPENDENT OF THE COLD FORMED STEEL FRAMING (U.N.O.) THE COLD FORMED STEEL FRAMING HAS BEEN DESIGNED TO LATERALLY SUPPORT ANY MASONRY.

6) ALL STUDS HAVE BEEN DESIGNED FOR UNIFORM LATERAL LOADS. METAL PANEL SYSTEM IS THEREFORE ASSUMED TO HAVE CONNECTIONS TO UNIFORMLY DISTRIBUTE LATERAL LOADING AND TO ISOLATE STUDS FROM ANY THERMAL MOVEMENT OF THE METAL PANEL SYSTEM. STUDS HAVE BEEN VALUE ENGINEERED. GC TO CONFIRM MINIMUM THICKNESS REQUIREMENTS WITH METAL PANEL MANUFACTURER.

7) TO PROVIDE FOR VERTICAL MOVEMENT (PER PROJECT SPECIFICATIONS) A DEFLECTION HEAD BY WINDOW MANUFACTURER WILL BE REQUIRED WHERE NOTED.

8) PROVIDE CONTROL TO VERIFY CONNECTION LOCATIONS TO STRUCTURE. (SPECIFICALLY BEAM BOTTOM FLANGE SUPPORTS)

9) ALL HEADER & SILL MEMBERS MUST SPAN ENTIRE LENGTH OF OPENING W/O SPLICES.

10) SECTION PROPERTIES USED IN THIS SUBMITTAL ARE THOSE PUBLISHED BY SSMA/ SFIA/ CSSA.

EXCEL
ARCHITECTS • ENGINEERS • SURVEYORS
Always a Better Plan
100 CAMELOT DRIVE
FOND DU LAC, WI 54935
PHONE: (920) 926-9800
WWW.EXCELENGINEER.COM

PROJECT INFORMATION

PROJECT CONTRACTOR
LEONARD S. FIORE, INC.
5506 6TH AVENUE
ALTOONA, PA 16602

COLD-FORMED STEEL SUBMITTAL FOR

GARRETT COLLEGE CEPAC

687 MOSSER ROAD • MCHENRY, MD 21541

PROJECT ENGINEER

ERIK JOHNSON
E-MAIL: Erik.J@ExcelEngineer.com
DRAWN BY: AEB

PROFESSIONAL SEAL

STATE OF MARYLAND KARL SCHERZER No. 30311 PROFESSIONAL ENGINEER

SUBMITTAL DATES

ISSUE DATE AUG. 20, 2020

REVISIONS

1 MAR. 12, 2021

PROJECT NUMBER

2030860

SHEET INFORMATION

SHEET NUMBER

S6

2020 © EXCEL ENGINEERING, INC.

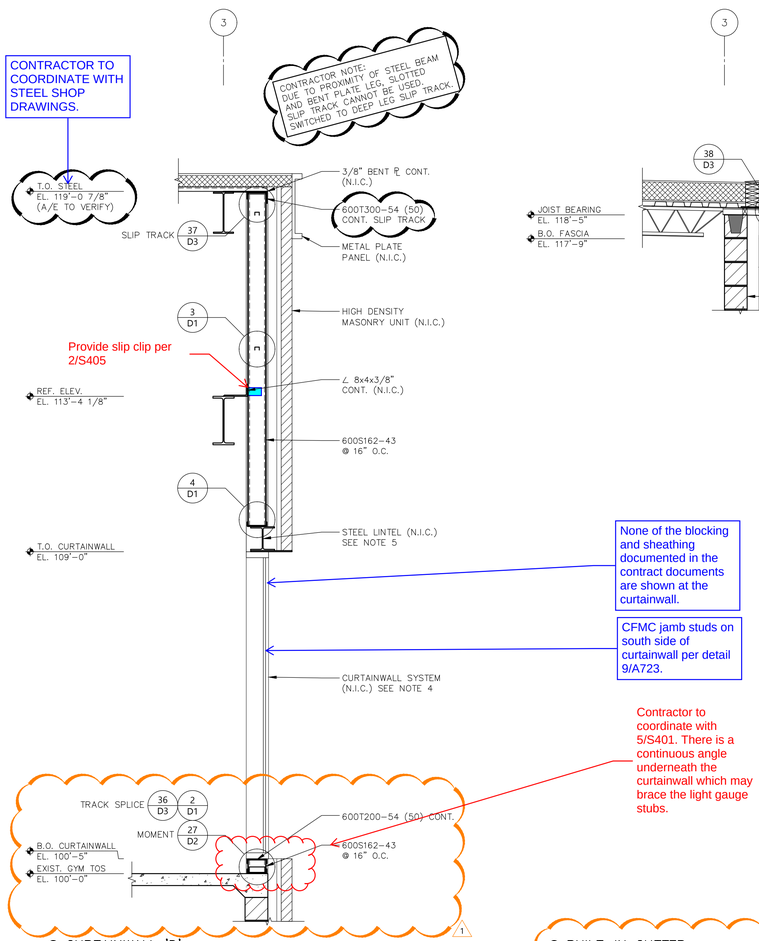

@ CURTAINWALL 'D'
WALL SECTION
21 S7 (1)

SCALE: 1/2" = 1'-0"
REF.: 2/ S601 (ARCH)
REF.: 2/ S405 (LOW BEAM)
REF.: 5/ S410 (HIGH ROOF)

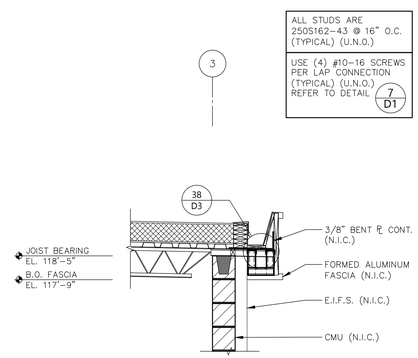

@ BUILT-IN GUTTER
WALL SECTION
22 S7 (1)

SCALE: 1/2" = 1'-0"
REF.: 13/ A722 (ARCH)
REF.: 2/ S406 (STRUCT)

SECTION NOTES:

1) ALL TRACK TO BE 1 1/4" FLANGE x 43 MILS, U.N.O.

2) REFER TO SHEET C2 FOR APPROVED FASTENERS (P.D.F.'s, SCREWS, CONCRETE ANCHORS, ETC.)

3) DIMENSIONS & ELEVATIONS ON EXCEL SHOP DRAWINGS ARE FOR REFERENCE ONLY. REFERENCE ARCHITECTURAL & STRUCTURAL.

4) A. STOREFRONTS & CURTAINWALLS ARE ASSUMED TO SPAN VERTICALLY WITH LOAD TRANSFER THROUGH THE VERTICAL MULLIONS. STUD FRAMING HAS BEEN DESIGNED UTILIZING CALCULATED MULLION LOADS PER PROJECT DESIGN CRITERIA. PROVIDE JAMB STUDS IN ACCORDANCE WITH STANDARD CONSTRUCTION PRACTICE.

   B. WINDOWS HAVE BEEN DESIGNED ASSUMING TRIBUTARY LOAD DISTRIBUTION TO HEADER, SILL & JAMB ELEMENTS.

5) ALL COLD FORMED STEEL FRAMING HAS BEEN DESIGNED FOR UNIFORM LOADS AND WALL CONSTRUCTION DEAD LOADS ONLY. (U.N.O.) THE WEIGHT OF ANY MASONRY VENEER IS ASSUMED TO BE SUPPORTED INDEPENDENT OF THE COLD FORMED STEEL FRAMING (U.N.O.) THE COLD FORMED STEEL FRAMING HAS BEEN DESIGNED TO LATERALLY SUPPORT ANY MASONRY.

6) ALL STUDS HAVE BEEN DESIGNED FOR UNIFORM LATERAL LOADS. METAL PANEL SYSTEM IS THEREFORE ASSUMED TO HAVE CONNECTIONS TO UNIFORMLY DISTRIBUTE LATERAL LOADING AND TO ISOLATE STUDS FROM ANY THERMAL MOVEMENT OF THE METAL PANEL SYSTEM. STUDS HAVE BEEN VALUE ENGINEERED. GC TO CONFIRM MINIMUM THICKNESS REQUIREMENTS WITH METAL PANEL MANUFACTURER.

7) TO PROVIDE FOR VERTICAL MOVEMENT (PER PROJECT SPECIFICATIONS) A DEFLECTION HEAD BY WINDOW MANUFACTURER WILL BE REQUIRED WHERE NOTED.

8) PROJECT ENGINEER TO VERIFY ALL CONNECTION LOCATIONS TO STRUCTURE. (SPECIFICALLY BEAM BOTTOM FLANGE SUPPORTS)

9) ALL HEADER & SILL MEMBERS MUST SPAN ENTIRE LENGTH OF OPENING W/O SPLICES.

10) SECTION PROPERTIES USED IN THIS SUBMITTAL ARE THOSE PUBLISHED BY SSMA/ SFIA/ CSSA.

EXCEL
ARCHITECTS • ENGINEERS • SURVEYORS
Always a Better Plan
100 CAMELOT DRIVE
FOND DU LAC, WI 54935
PHONE: (920) 926-9800
WWW.EXCELENGINEER.COM

PROJECT INFORMATION

PROJECT CONTRACTOR
LEONARD S. FIORE, INC.
5506 6TH AVENUE
ALTOONA, PA 16602

COLD-FORMED STEEL SUBMITTAL FOR
GARRETT COLLEGE CEPAC
687 MOSSER ROAD • MCHENRY, MD 21541

PROJECT ENGINEER

ERIK JOHNSON
E-MAIL: Erik.J@ExcelEngineer.com
DRAWN BY: AEB

PROFESSIONAL SEAL

SUBMITTAL DATES

ISSUE DATE AUG. 20, 2020

REVISIONS

1 MAR. 12, 2021

PROJECT NUMBER

2030860

SHEET INFORMATION

SHEET NUMBER

S7

2020 © EXCEL ENGINEERING, INC.

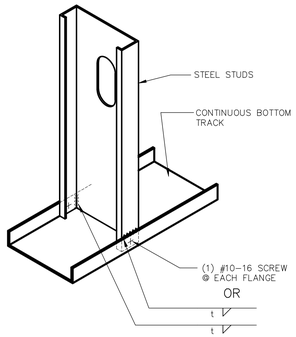

STUD TO TRACK CONNECTION (1/D1)

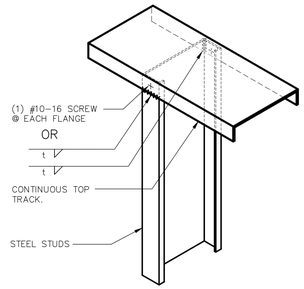

STUD TO TRACK CONNECTION (2/D1)

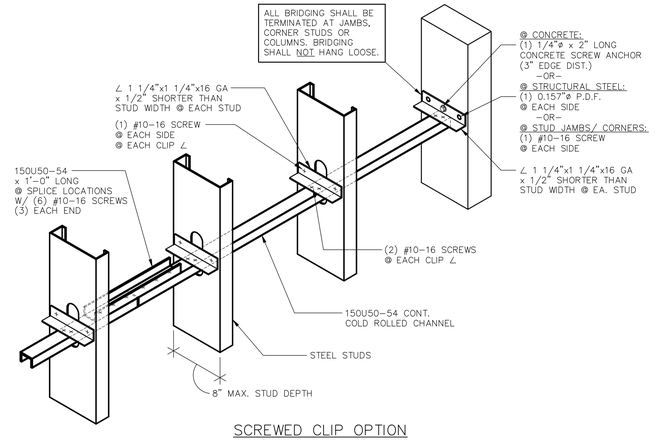

SCREWED CLIP OPTION

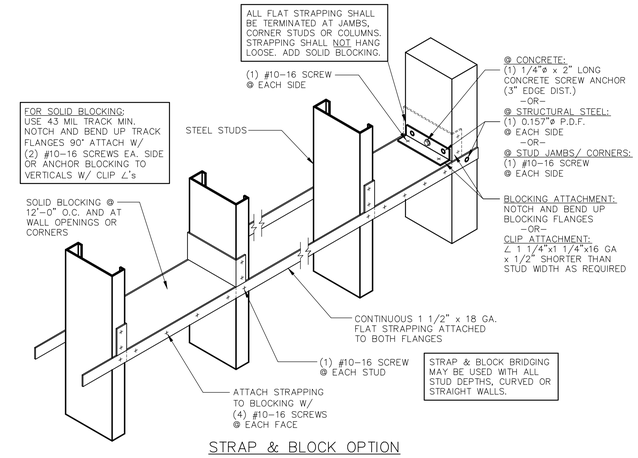

STRAP & BLOCK OPTION

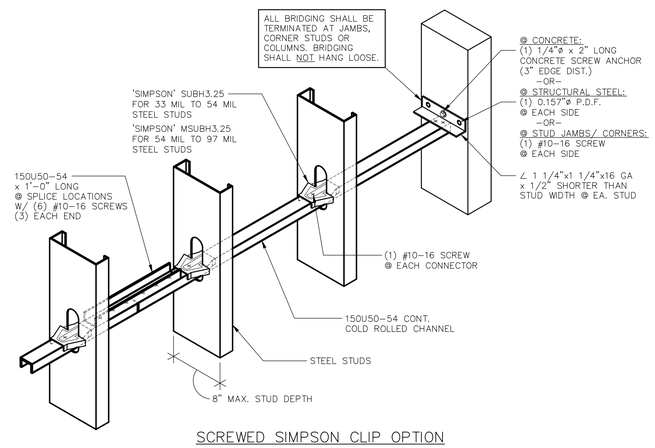

SCREWED SIMPSON CLIP OPTION

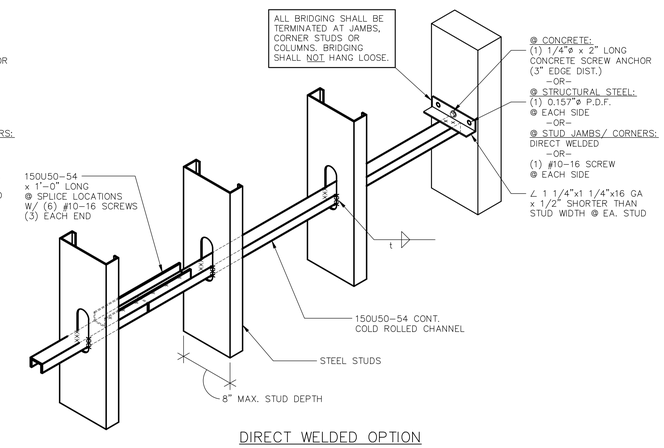

DIRECT WELDED OPTION

ALL BRIDGING VERTICAL SPACING @ 72" O.C. MAX. (U.N.O.)

BRIDGING ATTACHMENT OPTIONS (3/D1)

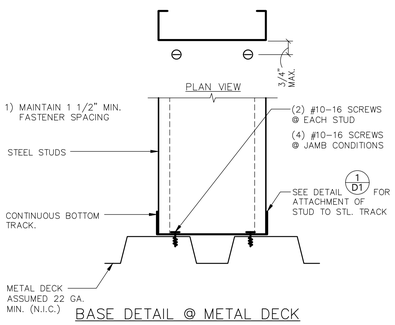

BASE DETAIL @ METAL DECK

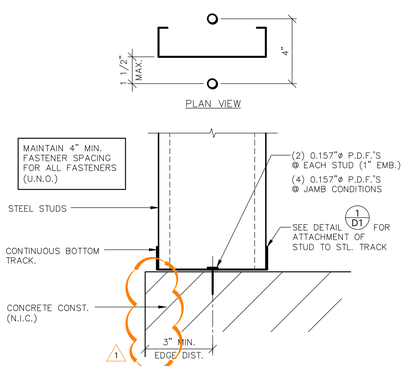

BASE DETAIL @ CONCRETE

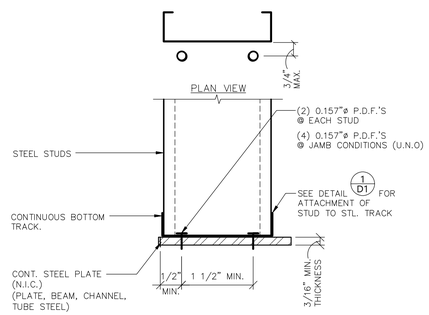

BASE DETAIL @ STRUCTURAL STEEL

TYPICAL BASE DETAILS (4/D1) 1

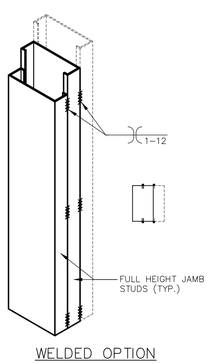

WELDED OPTION

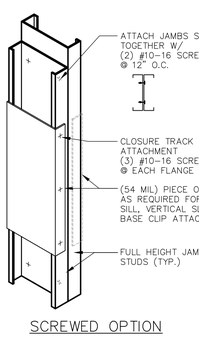

SCREWED OPTION

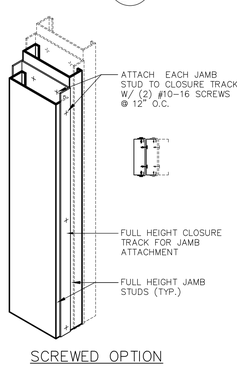

SCREWED OPTION

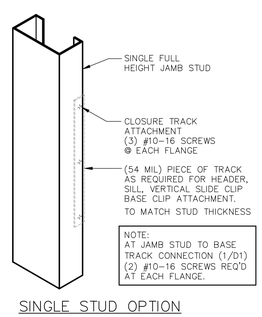

SINGLE STUD OPTION

JAMB ATTACHMENTS (5/D1)

CONTRACTOR'S OPTION

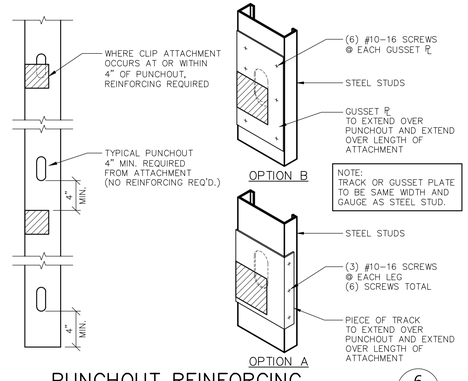

PUNCHOUT REINFORCING (6/D1)

(6" MIN. LENGTH FOR TRACK OR GUSSET PLATE)
FIELD DETAIL AS REQUIRED

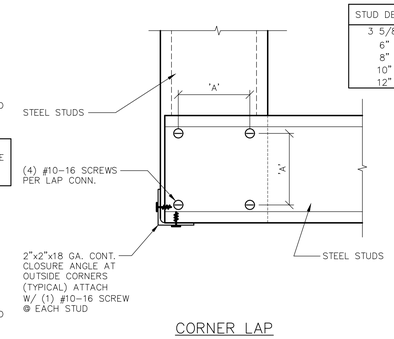

CORNER LAP

STUD DEPTH	'A'
3 5/8"	2 1/2"
6"	4"
8"	6"
10"	8"
12"	10"

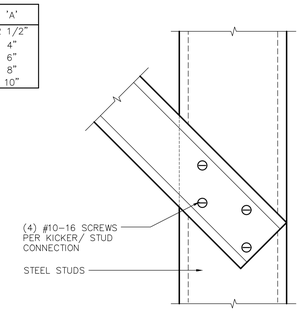

DIAGONAL LAP

LAP CONNECTIONS (7/D1)

EXCEL
ARCHITECTS • ENGINEERS • SURVEYORS
Always a Better Plan
100 CAMELOT DRIVE
FOND DU LAC, WI 54935
PHONE: (920) 926-9800
WWW.EXCELENGINEER.COM

PROJECT INFORMATION

PROJECT CONTRACTOR
LEONARD S. FIORE, INC.
5506 6TH AVENUE
ALTOONA, PA 16602

COLD-FORMED STEEL SUBMITTAL FOR
GARRETT COLLEGE CEPAC
687 MOSSER ROAD • MCHENRY, MD 21541

PROJECT ENGINEER

ERIK JOHNSON
E-MAIL: Erik.J@ExcelEngineer.com
DRAWN BY: AEB

PROFESSIONAL SEAL

STATE OF MARYLAND
ERIK J. SCHERTZ
No. 30311
PROFESSIONAL ENGINEER

SUBMITTAL DATES

ISSUE DATE	AUG. 20, 2020
REVISIONS	
1	MAR. 12, 2021

PROJECT NUMBER

2030860

SHEET INFORMATION

SHEET NUMBER

D1

2020 © EXCEL ENGINEERING, INC.

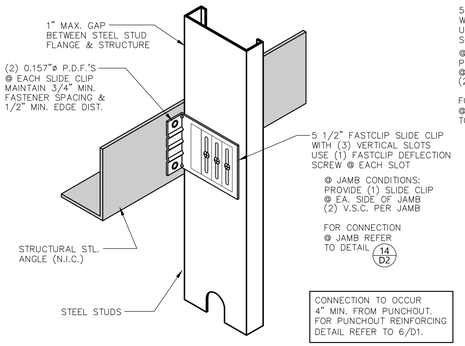

V.S.C. DETAIL 8 D2

V.S.C. = VERTICAL SLIDE CLIP
INSTALL PER MFG. SPECIFICATIONS

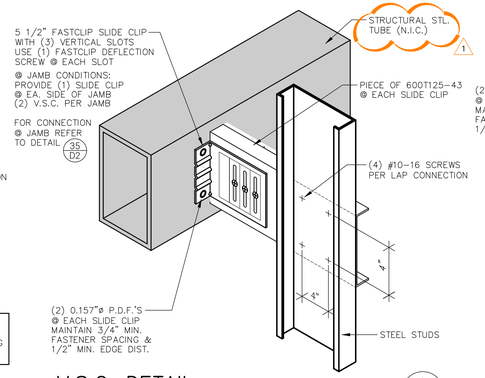

V.S.C. DETAIL 9 D2

(V.S.C. = VERTICAL SLIDE CLIP)
(INSTALL PER MANUFACTURER SPECIFICATIONS)

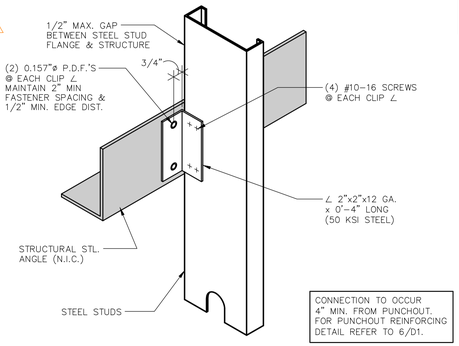

CONNECTION DETAIL 10 D2

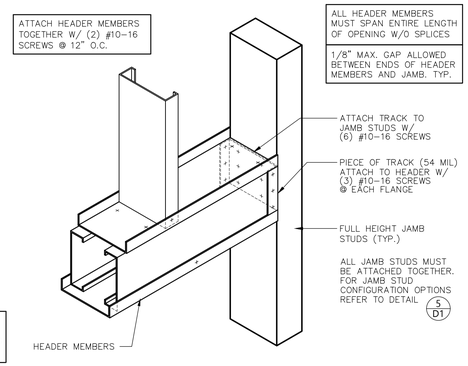

HEADER – JAMB DETAIL 11 D2

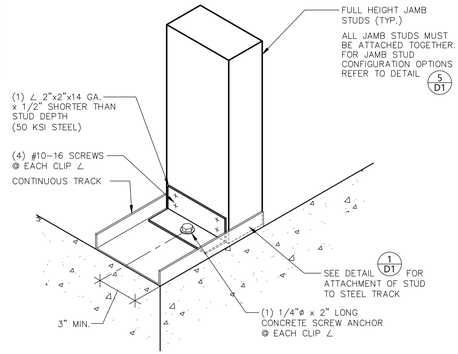

JAMB BASE DETAIL 12 D2

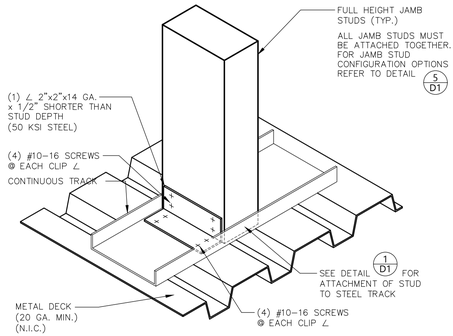

JAMB BASE DETAIL 13 D2

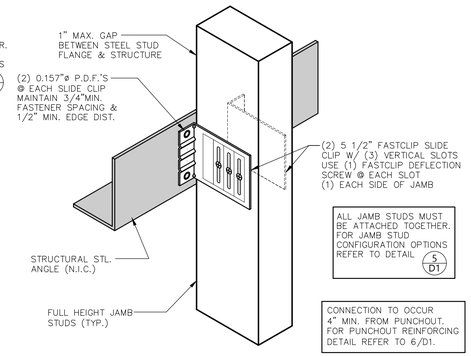

V.S.C. DETAIL @ JAMB 14 D2

V.S.C. = VERTICAL SLIDE CLIP
INSTALL PER MFG. SPECIFICATIONS

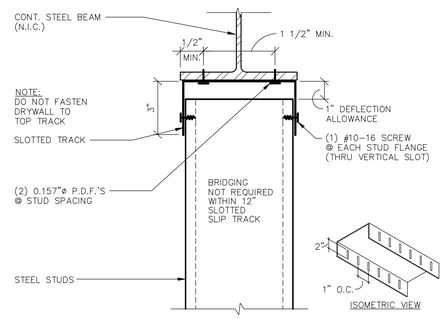

SLOTTED TRACK TO STEEL BEAM 15 D2

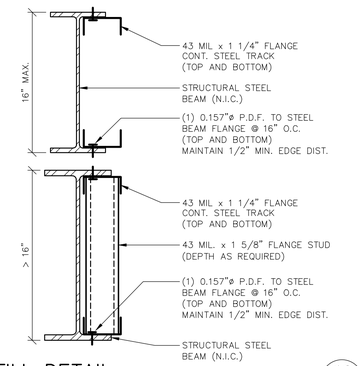

INFILL DETAIL 16 D2

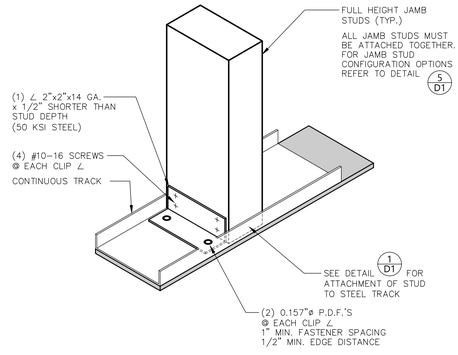

JAMB BASE DETAIL 17 D2

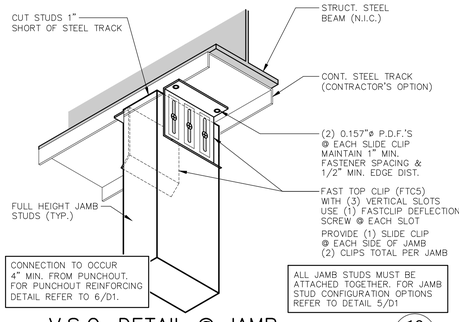

V.S.C. DETAIL @ JAMB 18 D2

(V.S.C. = VERTICAL SLIDE CLIP)
(INSTALL PER MANUFACTURER SPECIFICATIONS)

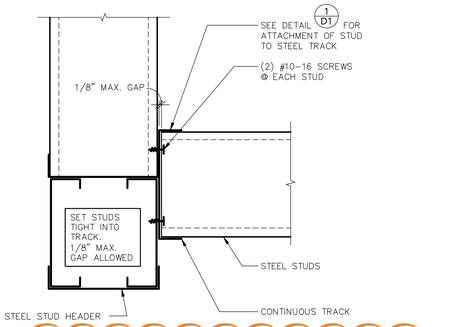

STUD TO STUD DETAIL 19 D2

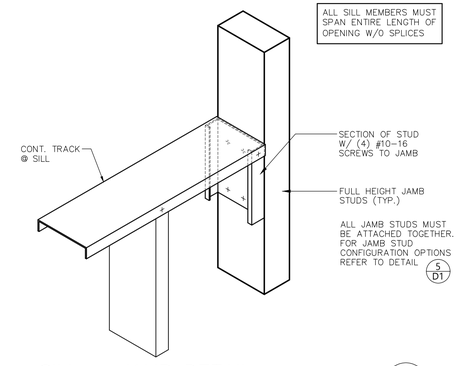

SILL – JAMB DETAIL 20 D2

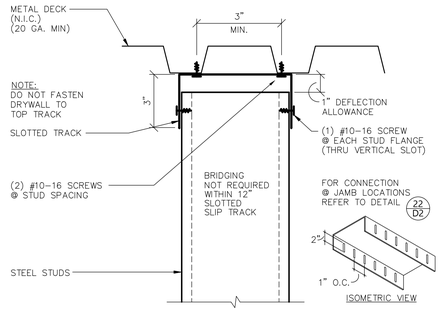

SLOTTED TRACK TO METAL DECK 21 D2

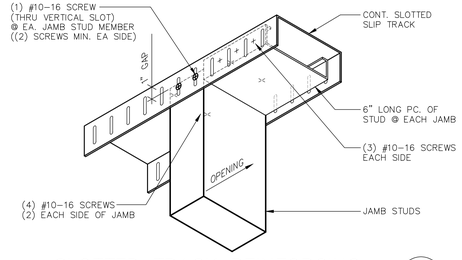

SLOTTED TRACK REINFORCING 22 D2

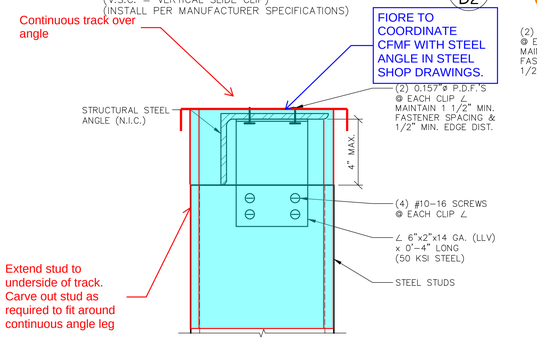

CONNECTION DETAIL 23 D2

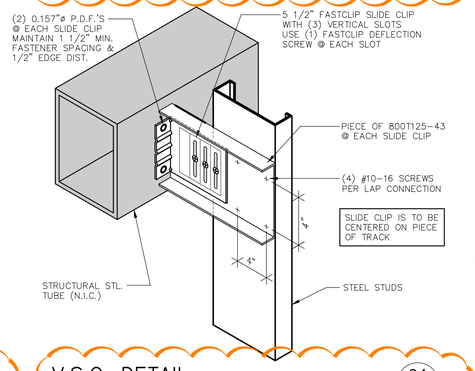

V.S.C. DETAIL 24 D2

(V.S.C. = VERTICAL SLIDE CLIP)
(INSTALL PER MANUFACTURER SPECIFICATIONS)

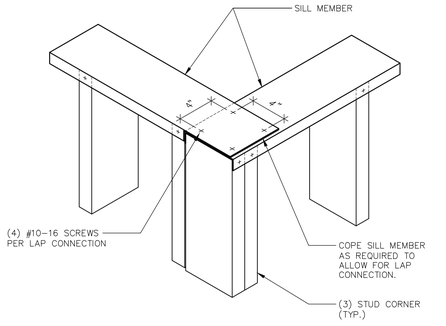

SILL – SILL DETAIL 25 D2

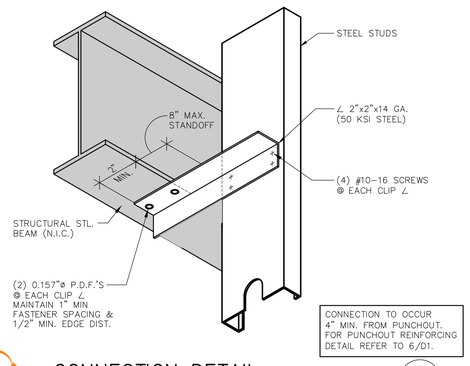

CONNECTION DETAIL 26 D2

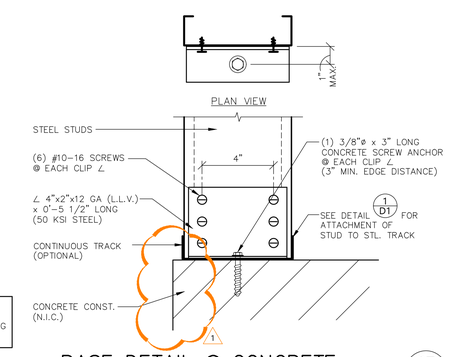

BASE DETAIL @ CONCRETE 27 D2

MOMENT BASE CONNECTION

EXCEL
ARCHITECTS • ENGINEERS • SURVEYORS
Always a Better Plan
100 CAMELOT DRIVE
FOND DU LAC, WI 54935
PHONE: (920) 926-9800
WWW.EXCELENGINEER.COM

PROJECT INFORMATION

PROJECT CONTRACTOR
LEONARD S. FIORE, INC.
5506 6TH AVENUE
ALTOONA, PA 16602

COLD-FORMED STEEL SUBMITTAL FOR
GARRETT COLLEGE CEPAC
687 MOSSER ROAD • MCHENRY, MD 21541

PROJECT ENGINEER

ERIK JOHNSON
E-MAIL: Erik.J@ExcelEngineer.com
DRAWN BY: AEB

PROFESSIONAL SEAL

SUBMITTAL DATES

ISSUE DATE	AUG. 20, 2020
REVISIONS	
1	MAR. 12, 2021

PROJECT NUMBER

2030860

SHEET INFORMATION

SHEET NUMBER

D2

2020 © EXCEL ENGINEERING, INC.

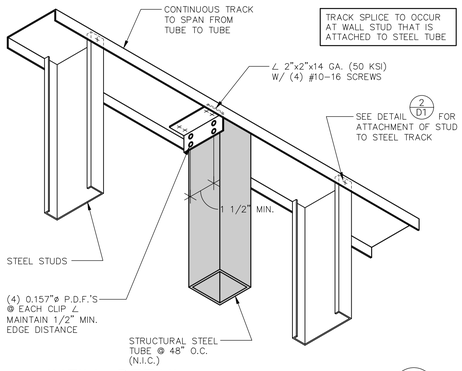

INFILL DETAIL 28/D3

contract documents show stud size as 2 1/2" but don't call out a size, shop drawings show size as 6". Contractor to coordinate with steel shops that 2" gap is achievable.

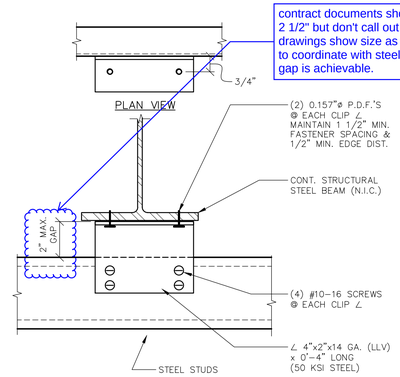

CONNECTION DETAIL 29/D3

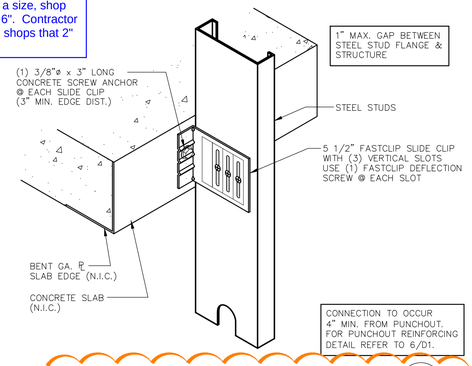

V.S.C. DETAIL 30/D3 1

V.S.C. = VERTICAL SLIDE CLIP
INSTALL PER MFG. SPECIFICATIONS

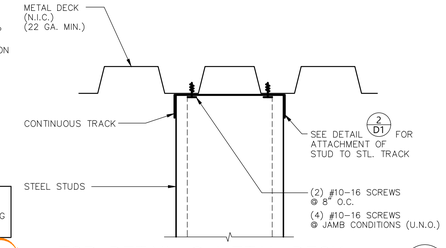

TOP DETAIL @ METAL DECK 31/D3

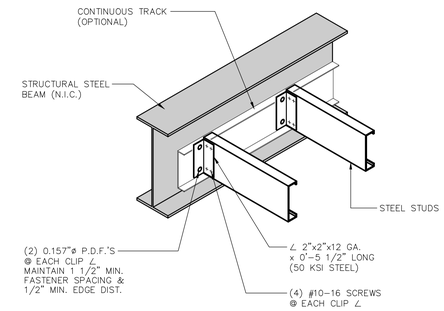

CONNECTION DETAIL 32/D3

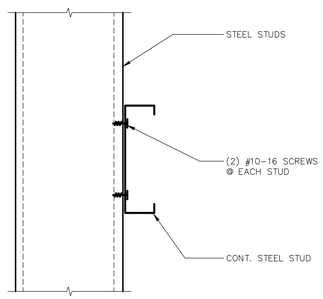

RUNNER DETAIL 33/D3

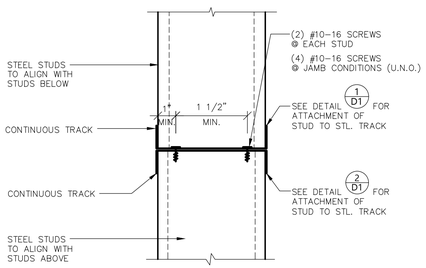

BASE DETAIL @ TRACK 34/D3

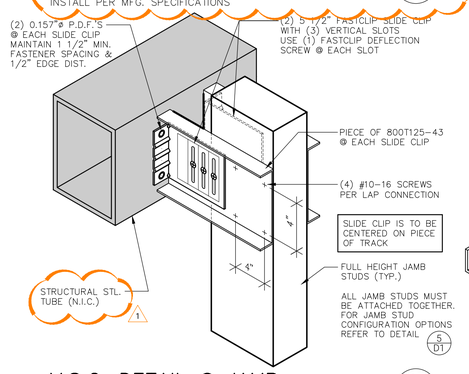

V.S.C. DETAIL @ JAMB 35/D3 1

(V.S.C. = VERTICAL SLIDE CLIP)
(INSTALL PER MANUFACTURER SPECIFICATIONS)

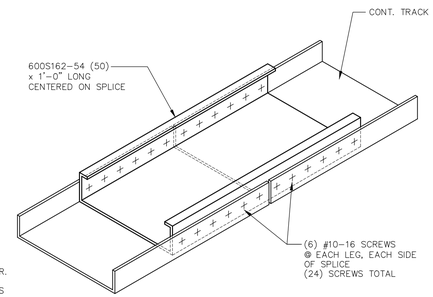

TRACK SPLICE DETAIL 36/D3

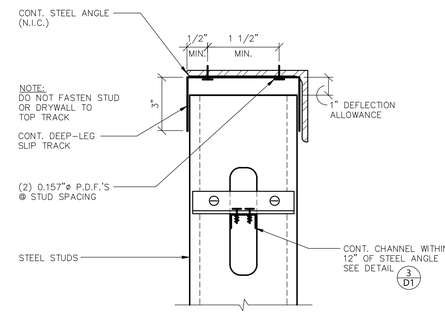

SLIP TRACK TO STEEL ANGLE 37/D3

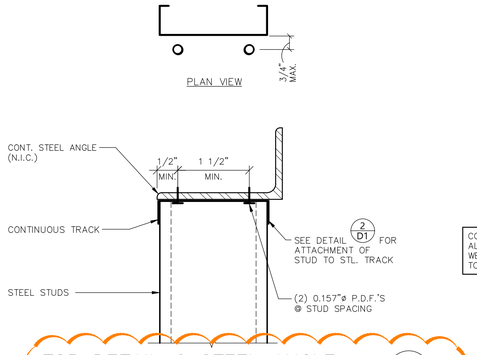

TOP DETAIL @ STEEL ANGLE 38/D3 1

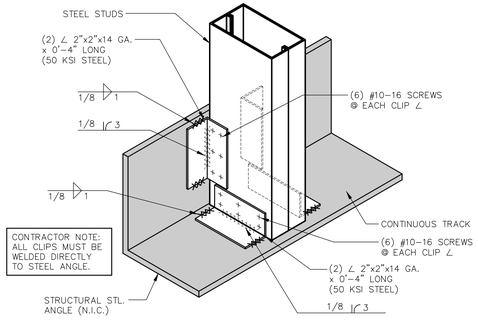

CONNECTION DETAIL 39/D3 1

EXCEL
ARCHITECTS • ENGINEERS • SURVEYORS
Always a Better Plan
100 CAMELOT DRIVE
FOND DU LAC, WI 54935
PHONE: (920) 926-9800
WWW.EXCELENGINEER.COM

PROJECT INFORMATION

PROJECT CONTRACTOR
LEONARD S. FIORE, INC.
5506 6TH AVENUE
ALTOONA, PA 16602

COLD-FORMED STEEL SUBMITTAL FOR
GARRETT COLLEGE CEPAC
687 MOSSER ROAD • MCHENRY, MD 21541

PROJECT ENGINEER
ERIK JOHNSON
E-MAIL: Erik.j@ExcelEngineer.com
DRAWN BY: AEB

PROFESSIONAL SEAL
STATE OF MARYLAND KARL SCHERZER No. 30911 PROFESSIONAL ENGINEER

SUBMITTAL DATES
ISSUE DATE AUG. 20, 2020
REVISIONS
1 MAR. 12, 2021

PROJECT NUMBER
2030860

SHEET INFORMATION
SHEET NUMBER
D3

2020 © EXCEL ENGINEERING, INC.

ADDITIONAL PDF PROVIDED IN SUBMITTAL

no sections shown thru here - coordinate with ASI 04.

stud below audience chamber roof is not included in this submittal - its part of interior framing. CFMF is provided above interior at this location.

see arch. plan for wall type thru here.

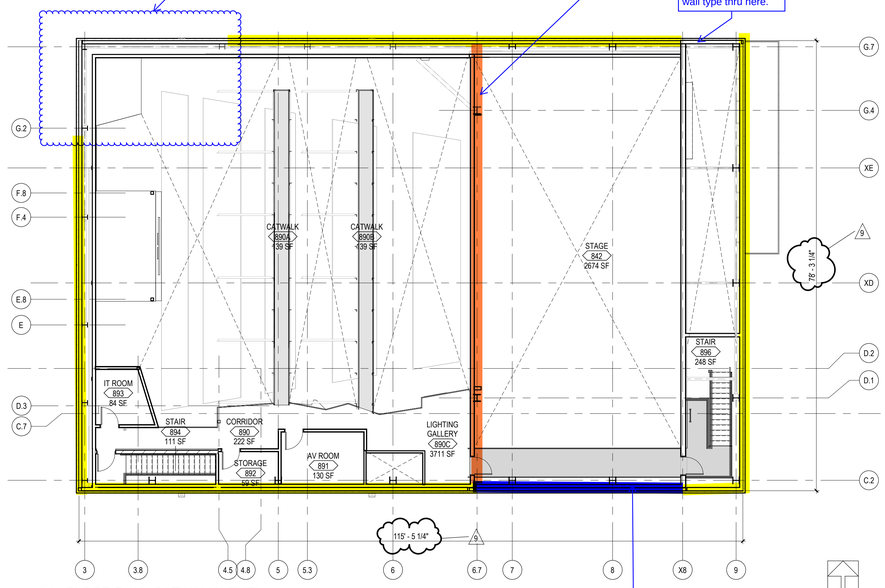

3 A101 FLOOR PLAN CATWALK LEVEL
SCALE: 3/32" = 1'-0"

wrong wall type shown in blue

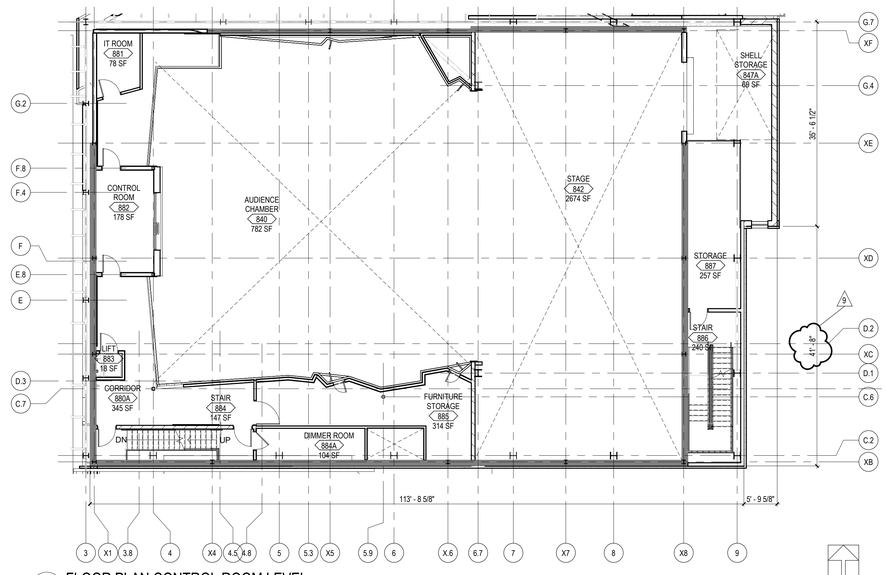

2 A101 FLOOR PLAN CONTROL ROOM LEVEL
SCALE: 3/32" = 1'-0"

no plan detail was provided , Provide plan detail.

no section was provided thru soffit area. Provide section detail.

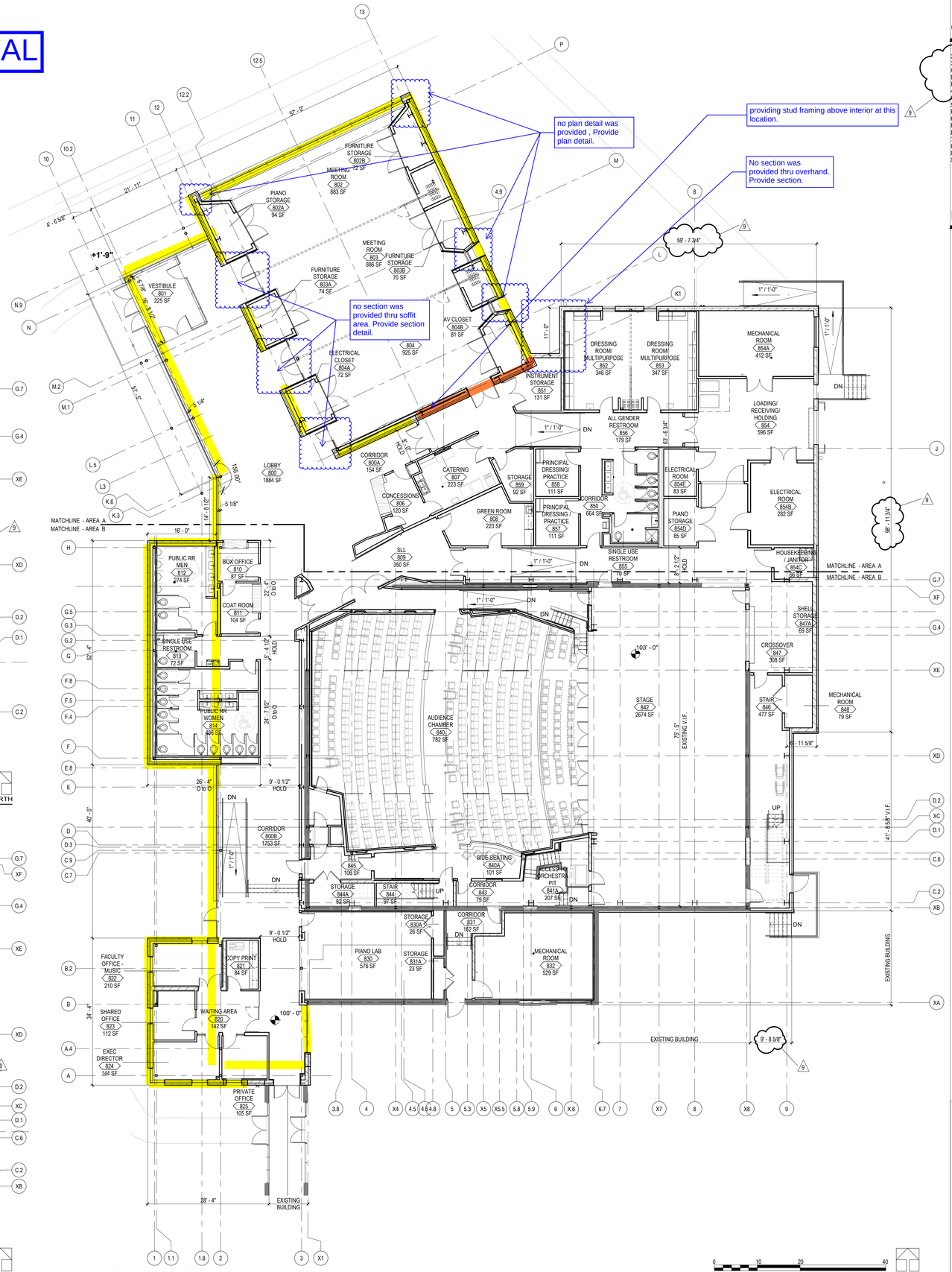

1 A101 FLOOR PLAN MAIN LEVEL
SCALE: 3/32" = 1'-0"

providing stud framing above interior at this location.

No section was provided thru overhand. Provide section.

LEGEND NOTES

General Notes - Floor Plan

1.NOT USED.
2.SEE A-600 FOR DOOR TYPES AND SCHEDULE.
3.ALL DIMENSIONS ARE FROM STUD TO STUD, OR TO COLUMN CENTERLINE, OR FACE OF MASONRY UNLESS NOTED OTHERWISE. ALL THICKNESSES ARE NOMINAL DIMENSIONS.
4.ALL DOOR OPENINGS ARE DIMENSIONED TO CENTERLINE OF DOOR OPENINGS.
5.VERIFY ALL DIMENSIONS AND CONDITIONS IN THE FIELD.
6.REFER TO ALL DISCIPLINE DRAWINGS FOR FULL EXTENT OF WORK. COORDINATE BETWEEN ALL TRADES / DISCIPLINES.
7.FLOOR TOLERANCE: EXISTING FLOOR SLABS TO BE LEVELED TO A TOLERANCE OF 1/4" SLOPE IN 10'-0".
8.ALL SLABS ABOVE 0'-0" TO BE BUILT OVER EXISTING SLAB AND STRUCTURAL FILL.

Floor Plan Legend

- EXISTING WALL
- NEW WALL
- NEW MASONRY WALL
- FINISH FURRING OVER DRYWALL PARTITIONS
- KEYED NOTE
- WALL TYPE TAG
- CORNERGUARD - SEE INTERIOR DETAIL SHEETS
- NEW MILLWORK
- NEW DOOR
- EXISTING DOOR TO REMAIN
- XXXXXX.XX KEYED NOTE
- SLAB PENETRATION, SEE PLUMBING DWGS
- FLOOR DRAIN, SEE PLUMBING DWGS
- CLEAN OUT, SEE PLUMBING DWGS

KEY PLAN

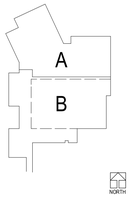

DLR Group
© DLR Group

BOARD OF ARCHITECTS 10973 PAUL WESTLAKE JR. STATE OF MARYLAND

DECEMBER 15, 2020

"Professional Certification. I certify that these documents were prepared or approved by me, and that I am a duly licensed architect under the laws of the State of Maryland, license number 10973, expiration date 01-08-2021."

GARRETT COLLEGE CEPAC

687 MOSSER ROAD,
MCHENRY, MD 21541

ISSUED FOR BID AND PERMIT

Issue Date: 11/15/2019

Revisions

1	ADDENDUM 01	12/11/2019
3	ASI 01	4/21/2020
6	ASI 04	09/25/2020
9	ASI 07	T.B.D.

56-18107-00

FLOOR PLAN OVERALL

A101

BIM 360://56-18107-00_Garrett_College_CEPAC/56-18107-00_GC-CEPAC_AR_2018.rvt
12/15/2020 8:35:53 PM